Signify

JRP558 MBP 350 RAL

912401451731



Pole-mounting bracket, 350 mm, RAL color

Metronomis is a family of highly distinctive luminaires and dedicated poles and brackets, which can be used with a wide diversity of optics to provide architects and lighting designers with the total solution needed to create a unified, consistent lighting design that still reflects the differences in urban culture and history. In its daytime appearance, Metronomis integrates harmoniously with any street scene, while its night-time appearance is both functional – guiding people and traffic safely through the city – and decorative, creating a pleasant ambience in city squares and pedestrian precincts.

Light Technical

Effective projected area	0.03 m²

Mechanical and Housing

Fixation point length distance (Nom)	70 mm
Fixation diameter	Mounting device diameter 60 mm

Bracket tilt angle	0°
Bracket to luminaire diameter	60 mm
Bracket length	350 mm
Bracket color	RAL color
Bracket type	Pole-mounting bracket
Net Weight (Piece)	1.300 kg

Approval and Application

CE mark	Yes
EU RoHS compliant	Yes

Sustainability Data

Non-virgin material ratio of the packaging	Cardboard > 80% recycled
Packaging Recyclable content ratio	Cardboard recycling rate > 80%
Packaging Material	Cardboard

Dimensional drawing

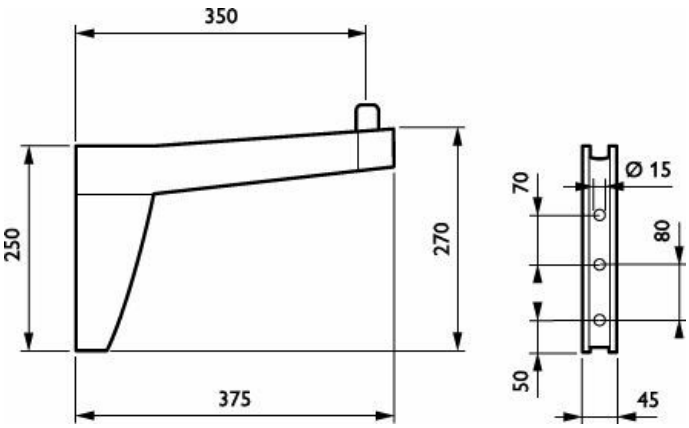

Product Data

Order product name	JRP558 MBP 350 RAL
Full product name	JRP558 MBP 350 RAL
Full product code	871869938388600
Order code	912401451731
Material Nr. (12NC)	912401451731
Numerator - Quantity Per Pack	1
EAN/UPC - Product/Case	8718699383886
Numerator - Packs per outer box	1
EAN/UPC - Case	8718699383886

© 2026 Signify Holding. All rights reserved. The information provided herein is subject to change, without notice. Signify does not give any representation or warranty as to the accuracy or completeness of the information included herein and shall not be liable for any action in reliance thereon. The information presented in this document is not intended as any commercial offer and does not form part of any quotation or contract, unless otherwise agreed by Signify. All trademarks are owned by Signify Holding or their respective owners.