PHILIPS

Essential MV MR16 Alu

HESSMV16



Trusted quality for best performance

The Essential MV MR16 Alu is part of the Philips "Value for Money" ranges. It is ideal for professional end-users looking for accent light - without a transformer - to create contrast in shops, hotels and restaurants.

Benefits

- Accent light to create the perfect focus on the objects to be lit
- Aluminum reflector to direct most of the heat to the front, ideal for heat-sensitive ceilings and luminaires
- Best dimmability to meet different brightness requirements

Applications

- Shops, hotels and restaurants

Features

- Bright sparkling light to create ambient atmosphere.
- Excellent color rendering (Ra=100) to present the true color of objects.
- Instant start to offer direct brightness from the moment switch on.
- No mercury to ensure the safety usage.
- Reliable quality to be trusted.

Versions



LPPR HTWIST 0002

Dimensional drawing

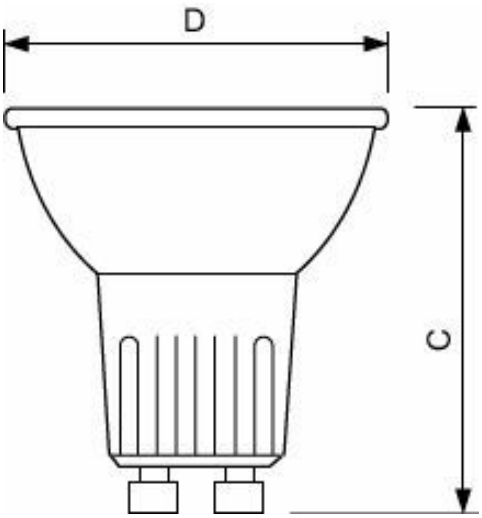

Product	D (max)	C (max)
ESS MR16 50W GU10 240V 60D 4CT/5	50.7 mm	47.5 mm
ESS MR16 Alu 50W GU10 240V 36D 2CT/6	51 mm	51 mm
ESS MR16 Alu 50W GU10 240V 36D 4CT/5	51 mm	51 mm
ESS MR16 ESS 35W GU10 240V 50D 4CT/5	50.7 mm	46 mm

General Information

Cap-Base	GU10
Operating Position	UNIVERSAL [Any or Universal (U)]
Nominal lifetime	2,000 hour(s)
Rated Lifetime (Hours)	2,000 hour(s)

Light Technical

Color rendering index (CRI)	100

Operating and Electrical

Starting Time (Nom)	0.0 s
Voltage (Nom)	240 V

Controls and Dimming

Dimmable	Yes

Mechanical and Housing

Bulb Finish	Clear
Bulb Shape	MR16

Light Technical

Order Code	Full Product Name	Beam Angle (Nom)	Correlated Color Temperature (Nom)
924885445586	ESS MR16 50W GU10 240V 60D 4CT/5	60 degree(s)	2800 K
925644345503	ESS MR16 Alu 50W GU10 240V 36D 4CT/5	36 degree(s)	2800 K
925644345504	ESS MR16 Alu 50W GU10 240V 36D 2CT/6	36 degree(s)	2800 K
925712945502	ESS MR16 ESS 35W GU10 240V 50D 4CT/5	50 degree(s)	2700 K

Operating and Electrical

Order Code	Full Product Name	Power Consumption
924885445586	ESS MR16 50W GU10 240V 60D 4CT/5	50 W
925644345503	ESS MR16 Alu 50W GU10 240V 36D 4CT/5	50 W
925644345504	ESS MR16 Alu 50W GU10 240V 36D 2CT/6	50 W
925712945502	ESS MR16 ESS 35W GU10 240V 50D 4CT/5	35 W

© 2026 Signify Holding. All rights reserved. The information provided herein is subject to change, without notice. Signify does not give any representation or warranty as to the accuracy or completeness of the information included herein and shall not be liable for any action in reliance thereon. The information presented in this document is not intended as any commercial offer and does not form part of any quotation or contract, unless otherwise agreed by Signify. Philips and the Philips Shield Emblem are registered trademarks of Koninklijke Philips N.V.