PHILIPS

HF-Essential for TL5/TL-D

HFETDT5



HF-Essential for TL5/TL-D

Essentially smart and reliable. HF-Essential is the most cost-effective, slim and affordable ballast to reliably operate a fluorescent lamp. It is also the ideal entry-level product for EM system users who want to enjoy the benefits offered by electronic ballasts. The cost-saving and reliable HF-Essential has an energy efficiency class A2, and its robust design meets all relevant international safety and performance standards. HF- Essential is intended for use with indoor lighting fixtures such as recessed luminaires, which are largely used in office, industrial, hotel, restaurant and other applications. The ballast is primarily designed for Indoor application. For outdoor application, the luminaire should be minimum ClassIand need to be sufficiently protected against water & dust. The installation should also be guard against any lightening surge or any other necessary electrical protection as deemed in such typical installation & application.

Benefits

- Automatic restart (after voltage dip or lamp replacement) ensures easy operation and hassle-free re-lamping
- DC emergency operation and EMC compliant to EN 55015 2006 + A1 2007
- Suitable for luminaires in protection class I and, after testing, class II

Features

- Complies with CE and Kema
- Robust design for 45,000 hours lifetime at Ta=50 ˚C and over 6,000 on/off switching operations on one lamp
- Energy efficiency class: A2
- Failure rate of 0.3% per 1,000 hours at Tc max = 75 °C
- Igniter and capacitor not required; flicker-free and noiseless

Applications

- Ideal for applications where there is a need to reduce the wattage per square meter or to reduce operating costs
- Indoor applications such as office buildings, hospitals, supermarkets, department stores, homes and schools

Versions



GPPR_HFETLDTL_0001-Product photo

Dimensional drawing

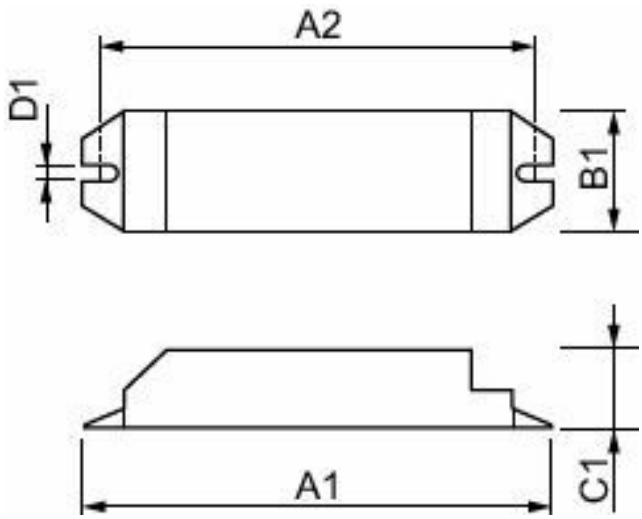

Product	D1	C1	A1	A2	B1
HF-E 136 TL-D 220-240 50/60Hz	4.2 mm	28.0 mm	150.0 mm	136.0 mm	40.0 mm
HF-E 236 TL-D 220-240 50/60Hz	4.2 mm	30.0 mm	211.0 mm	197.0 mm	40.0 mm

Operating and Electrical

Input Voltage	220 to 240 V
Line Frequency	50 to 60 Hz
Input Frequency	50 to 60 Hz

Approval and Application

Energy Efficiency Index	A2

Mechanical and Housing

Order Code	Full Product Name	Housing
913713038866	HF-E 136 TL-D 220-240 50/60Hz	L 150x40x28
913713039166	HF-E 236 TL-D 220-240 50/60Hz	L211x40x30

© 2026 Signify Holding. All rights reserved. The information provided herein is subject to change, without notice. Signify does not give any representation or warranty as to the accuracy or completeness of the information included herein and shall not be liable for any action in reliance thereon. The information presented in this document is not intended as any commercial offer and does not form part of any quotation or contract, unless otherwise agreed by Signify. Philips and the Philips Shield Emblem are registered trademarks of Koninklijke Philips N.V.