PHILIPS

GreenPerform Highbay Rectangular

BY570



GreenPerform Highbay: A versatile LED highbay that’s designed to optimize performance

The GreenPerform Highbay Rectangular continues the GreenPerform family’s enviable reputation for reliable performance, provi. Not only does it deliver Unified Glare Rating (UGR) control with its optimized optical design, it also promises leading system efficiency, compact dimensions and extended long-term quality. Optimized for almost all industrial applications, it is also fully compatible with IoT software such as the Interact scalable system.

Benefits

- Excellent energy savings
- Long-term quality and reliability
- Great design flexibility and convenience thanks to optimized optics and multiple control options

Applications

- Warehouses
- Manufacturing
- Distribution center
- Exhibition hall

Features

- up to 156lm/W system efficacy
- 75,000 hours L70B50 lifetime @Ta 35^{0}C
- Glare control (Near Beam), uniform illustration (Wide Beam) and maximal spacing (High-Rack Optic).
- Works seamlessly with the Interact IoT software and platform
- Compact and robust design

Versions



GreenPerform Highbay Rectangular



GreenPerform Highbay Rectangular



GreenPerform Highbay Rectangular



GreenPerform Highbay Rectangular

Dimensional drawing

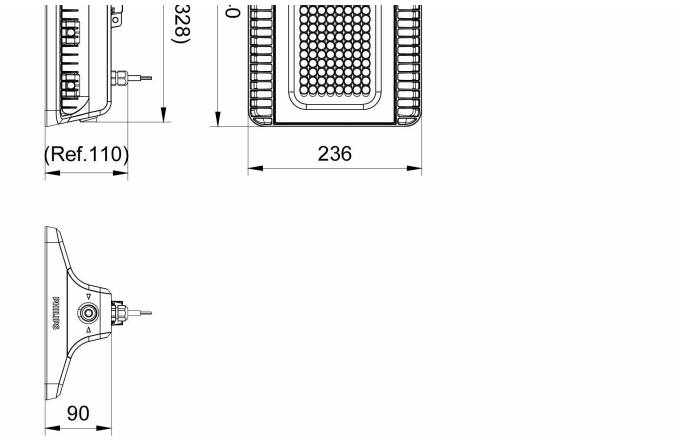

BY570P LED150/CW PSU WB PP

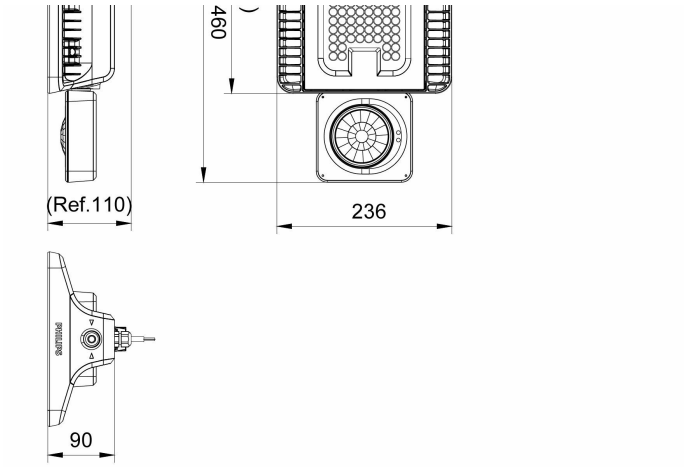

BY570X LED150/NW SIA NB PP

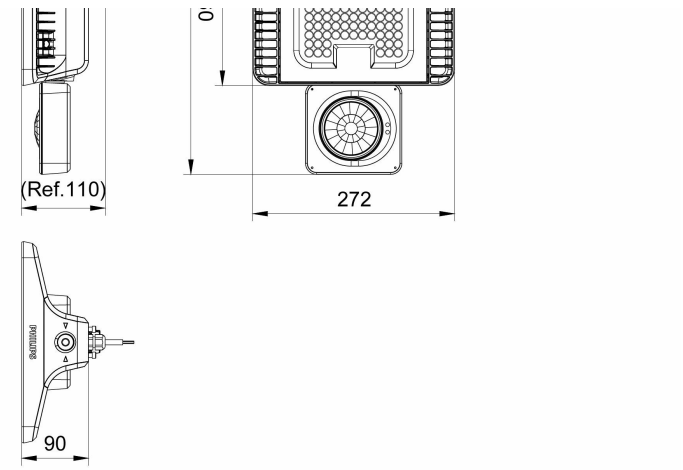

BY570X LED200/NW SIA WB PP

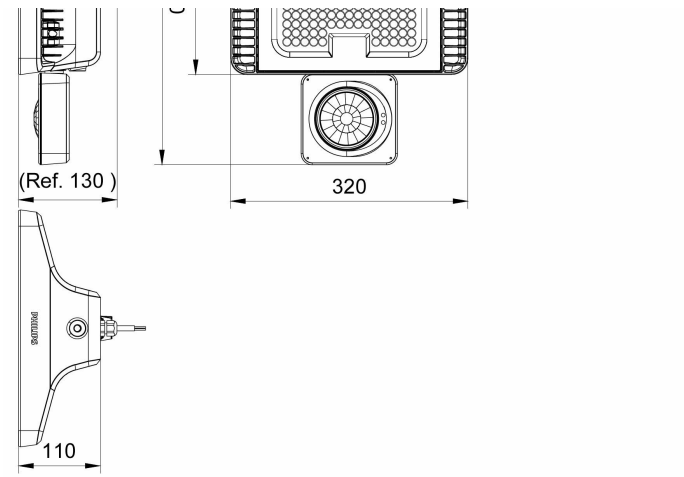

BY570X LED250/CW SIA NB SP

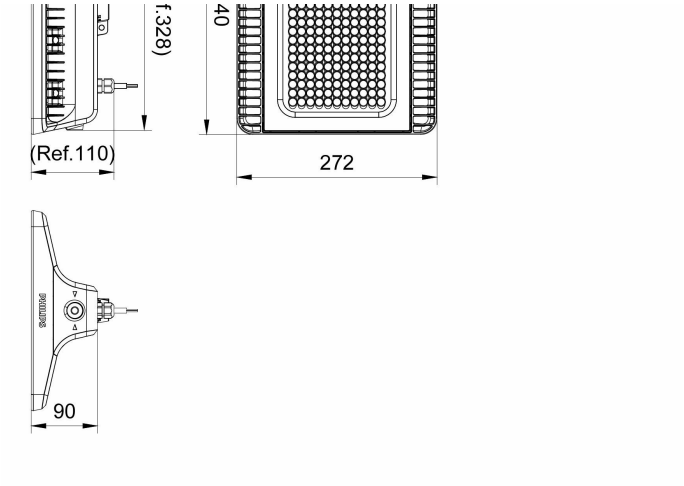

BY570P LED200/NW PSU HRO SP

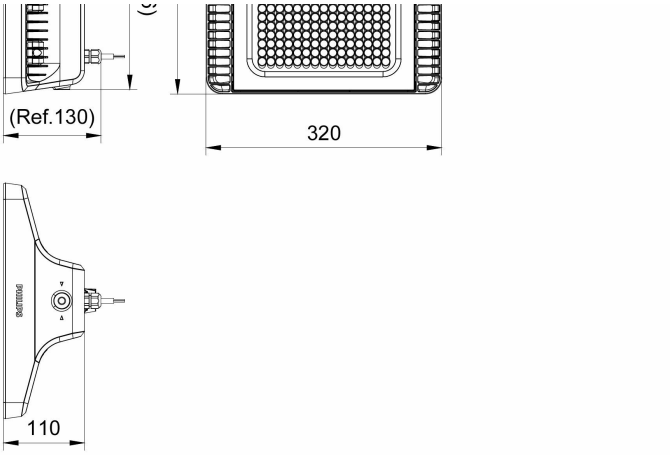

BY570P LED250/NW PSU NB SP

General Information

Driver included	Yes
Service tag	Yes

Light Technical

Color rendering index (CRI)	80
Beam angle of light source	116 degree(s)

Operating and Electrical

Line Frequency	50 to 60 Hz
Suitable for random switching	No
Protection class IEC	Safety class I

Mechanical and Housing

Housing Color	RAL 7043
Ingress protection code	IP65 [Dust penetration-protected, jet-proof]
Mech. impact protection code	IK06 [1 J]
Optical cover type	Polycarbonate

Approval and Application

CE mark	Yes

Initial Performance (IEC Compliant)

Luminous flux tolerance	-10% / +10%

Light Technical

Order Code	Full Product Name	Luminous Flux	Correlated Color Temperature (Nom)	Luminous Efficacy (rated) (Nom)	Optic type
911401566543	BY570P LED100/NW PSU WB PP	10,000 lm	4000 K	156 lm/W	Beam angle 90°
911401566643	BY570P LED100/NW PSU NB PP	10,000 lm	4000 K	156 lm/W	Beam angle 60°
911401566743	BY570P LED100/NW PSU HRO PP	10,000 lm	4000 K	156 lm/W	Symmetrical
911401566843	BY570P LED100/CW PSU WB PP	10,000 lm	6500 K	156 lm/W	Beam angle 90°
911401566943	BY570P LED100/CW PSU NB PP	10,000 lm	6500 K	156 lm/W	Beam angle 60°
911401567043	BY570P LED100/CW PSU HRO PP	10,000 lm	6500 K	156 lm/W	Symmetrical
911401567143	BY570P LED150/NW PSU WB PP	15,000 lm	4000 K	144 lm/W	Beam angle 90°
911401567243	BY570P LED150/NW PSU NB PP	15,000 lm	4000 K	144 lm/W	Beam angle 60°
911401567343	BY570P LED150/NW PSU HRO PP	15,000 lm	4000 K	144 lm/W	Symmetrical
911401567443	BY570P LED150/CW PSU WB PP	15,000 lm	6500 K	144 lm/W	Beam angle 90°
911401567543	BY570P LED150/CW PSU NB PP	15,000 lm	6500 K	144 lm/W	Beam angle 60°
911401567643	BY570P LED150/CW PSU HRO PP	15,000 lm	6500 K	144 lm/W	Symmetrical
911401568943	BY570P LED100/NW PSD WB PP	10,000 lm	4000 K	149 lm/W	Beam angle 90°
911401569043	BY570P LED100/NW PSD NB PP	10,000 lm	4000 K	149 lm/W	Beam angle 60°
911401569143	BY570P LED100/NW PSD HRO PP	10,000 lm	4000 K	149 lm/W	Symmetrical
911401569243	BY570P LED100/CW PSD WB PP	10,000 lm	6500 K	149 lm/W	Beam angle 90°
911401569343	BY570P LED100/CW PSD NB PP	10,000 lm	6500 K	149 lm/W	Beam angle 60°
911401569443	BY570P LED100/CW PSD HRO PP	10,000 lm	6500 K	149 lm/W	Symmetrical
911401569543	BY570P LED150/NW PSD WB PP	15,000 lm	4000 K	137 lm/W	Beam angle 90°
911401569643	BY570P LED150/NW PSD NB PP	15,000 lm	4000 K	137 lm/W	Beam angle 60°
911401569743	BY570P LED150/NW PSD HRO PP	15,000 lm	4000 K	137 lm/W	Symmetrical
911401569843	BY570P LED150/CW PSD WB PP	15,000 lm	6500 K	137 lm/W	Beam angle 90°
911401569943	BY570P LED150/CW PSD NB PP	15,000 lm	6500 K	137 lm/W	Beam angle 60°
911401570043	BY570P LED150/CW PSD HRO PP	15,000 lm	6500 K	137 lm/W	Symmetrical
911401573743	BY570P LED100/NW PSU WB SP	10,000 lm	4000 K	156 lm/W	Beam angle 90°
911401573843	BY570P LED100/NW PSU NB SP	10,000 lm	4000 K	156 lm/W	Beam angle 60°
911401573943	BY570P LED100/NW PSU HRO SP	10,000 lm	4000 K	156 lm/W	Symmetrical
911401574043	BY570P LED100/CW PSU WB SP	10,000 lm	6500 K	156 lm/W	Beam angle 90°
911401574143	BY570P LED100/CW PSU NB SP	10,000 lm	6500 K	156 lm/W	Beam angle 60°
911401574243	BY570P LED100/CW PSU HRO SP	10,000 lm	6500 K	156 lm/W	Symmetrical
911401574343	BY570P LED150/NW PSU WB SP	15,000 lm	4000 K	144 lm/W	Beam angle 90°
911401574443	BY570P LED150/NW PSU NB SP	15,000 lm	4000 K	144 lm/W	Beam angle 60°
911401574543	BY570P LED150/NW PSU HRO SP	15,000 lm	4000 K	144 lm/W	Symmetrical
911401574643	BY570P LED150/CW PSU WB SP	15,000 lm	6500 K	144 lm/W	Beam angle 90°
911401574743	BY570P LED150/CW PSU NB SP	15,000 lm	6500 K	144 lm/W	Beam angle 60°
911401574843	BY570P LED150/CW PSU HRO SP	15,000 lm	6500 K	144 lm/W	Symmetrical
911401576143	BY570P LED100/NW PSD WB SP	10,000 lm	4000 K	149 lm/W	Beam angle 90°
911401576243	BY570P LED100/NW PSD NB SP	10,000 lm	4000 K	149 lm/W	Beam angle 60°
911401576343	BY570P LED100/NW PSD HRO SP	10,000 lm	4000 K	149 lm/W	Symmetrical

Order Code	Full Product Name	Luminous Flux	Correlated Color Temperature (Nom)	Luminous Efficacy (rated) (Nom)	Optic type
911401576443	BY570P LED100/CW PSD WB SP	10,000 lm	6500 K	149 lm/W	Beam angle 90°
911401576543	BY570P LED100/CW PSD NB SP	10,000 lm	6500 K	149 lm/W	Beam angle 60°
911401576643	BY570P LED100/CW PSD HRO SP	10,000 lm	6500 K	149 lm/W	Symmetrical
911401576743	BY570P LED150/NW PSD WB SP	15,000 lm	4000 K	137 lm/W	Beam angle 90°
911401576843	BY570P LED150/NW PSD NB SP	15,000 lm	4000 K	137 lm/W	Beam angle 60°
911401576943	BY570P LED150/NW PSD HRO SP	15,000 lm	4000 K	137 lm/W	Symmetrical
911401577043	BY570P LED150/CW PSD WB SP	15,000 lm	6500 K	137 lm/W	Beam angle 90°
911401577143	BY570P LED150/CW PSD NB SP	15,000 lm	6500 K	137 lm/W	Beam angle 60°
911401577243	BY570P LED150/CW PSD HRO SP	15,000 lm	6500 K	137 lm/W	Symmetrical
911401580943	BY570P LED100/840 PSU WB CAU	10,000 lm	4000 K	156 lm/W	Beam angle 90°
911401581043	BY570P LED100/840 PSU NB CAU	10,000 lm	4000 K	156 lm/W	Beam angle 60°
911401581143	BY570P LED100/840 PSU HRO CAU	10,000 lm	4000 K	156 lm/W	Symmetrical
911401581243	BY570P LED150/840 PSU WB CAU	10,000 lm	4000 K	144 lm/W	Beam angle 90°
911401581343	BY570P LED150/840 PSU NB CAU	10,000 lm	4000 K	144 lm/W	Beam angle 60°
911401581443	BY570P LED150/840 PSU HRO CAU	10,000 lm	4000 K	144 lm/W	Symmetrical
911401582143	BY570P LED100/840 PSD WB CAU	20,000 lm	4000 K	149 lm/W	Beam angle 90°
911401582243	BY570P LED100/840 PSD NB CAU	20,000 lm	4000 K	149 lm/W	Beam angle 60°
911401582343	BY570P LED100/840 PSD HRO CAU	20,000 lm	4000 K	149 lm/W	Symmetrical
911401582443	BY570P LED150/840 PSD WB CAU	20,000 lm	4000 K	137 lm/W	Beam angle 90°
911401582543	BY570P LED150/840 PSD NB CAU	20,000 lm	4000 K	137 lm/W	Beam angle 60°
911401582643	BY570P LED150/840 PSD HRO CAU	20,000 lm	4000 K	137 lm/W	Symmetrical
911401584943	BY570P LED100/850 PSU WB JP	10,000 lm	5000 K	156 lm/W	Beam angle 90°
911401585043	BY570P LED150/850 PSU WB JP	150,000 lm	5000 K	144 lm/W	Beam angle 90°
911401568343	BY570P LED250/NW PSU WB PP	25,000 lm	4000 K	146 lm/W	Beam angle 90°
911401568443	BY570P LED250/NW PSU NB PP	25,000 lm	4000 K	146 lm/W	Beam angle 60°
911401568543	BY570P LED250/NW PSU HRO PP	25,000 lm	4000 K	146 lm/W	Symmetrical
911401568643	BY570P LED250/CW PSU WB PP	25,000 lm	6500 K	146 lm/W	Beam angle 90°
911401568743	BY570P LED250/CW PSU NB PP	25,000 lm	6500 K	146 lm/W	Beam angle 60°
911401568843	BY570P LED250/CW PSU HRO PP	25,000 lm	6500 K	146 lm/W	Symmetrical
911401570743	BY570P LED250/NW PSD WB PP	25,000 lm	4000 K	139 lm/W	Beam angle 90°
911401570843	BY570P LED250/NW PSD NB PP	25,000 lm	4000 K	139 lm/W	Beam angle 60°
911401570943	BY570P LED250/NW PSD HRO PP	25,000 lm	4000 K	139 lm/W	Symmetrical
911401571043	BY570P LED250/CW PSD WB PP	25,000 lm	6500 K	139 lm/W	Beam angle 90°
911401571143	BY570P LED250/CW PSD NB PP	25,000 lm	6500 K	139 lm/W	Beam angle 60°
911401571243	BY570P LED250/CW PSD HRO PP	25,000 lm	6500 K	139 lm/W	Symmetrical
911401575543	BY570P LED250/NW PSU WB SP	25,000 lm	4000 K	146 lm/W	Beam angle 90°
911401575643	BY570P LED250/NW PSU NB SP	25,000 lm	4000 K	146 lm/W	Beam angle 60°
911401575743	BY570P LED250/NW PSU HRO SP	25,000 lm	4000 K	146 lm/W	Symmetrical
911401575843	BY570P LED250/CW PSU WB SP	25,000 lm	6500 K	146 lm/W	Beam angle 90°
911401575943	BY570P LED250/CW PSU NB SP	25,000 lm	6500 K	146 lm/W	Beam angle 60°
911401576043	BY570P LED250/CW PSU HRO SP	25,000 lm	6500 K	146 lm/W	Symmetrical
911401577943	BY570P LED250/NW PSD WB SP	25,000 lm	4000 K	139 lm/W	Beam angle 90°

Order Code	Full Product Name	Luminous Flux	Correlated Color Temperature (Nom)	Luminous Efficacy (rated) (Nom)	Optic type
911401578043	BY570P LED250/NW PSD NB SP	25,000 lm	4000 K	139 lm/W	Beam angle 60°
911401578143	BY570P LED250/NW PSD HRO SP	25,000 lm	4000 K	139 lm/W	Symmetrical
911401578243	BY570P LED250/CW PSD WB SP	25,000 lm	6500 K	139 lm/W	Beam angle 90°
911401578343	BY570P LED250/CW PSD NB SP	25,000 lm	6500 K	139 lm/W	Beam angle 60°
911401578443	BY570P LED250/CW PSD HRO SP	25,000 lm	6500 K	139 lm/W	Symmetrical
911401581843	BY570P LED250/840 PSU WB CAU	15,000 lm	4000 K	146 lm/W	Beam angle 90°
911401581943	BY570P LED250/840 PSU NB CAU	15,000 lm	4000 K	146 lm/W	Beam angle 60°
911401582043	BY570P LED250/840 PSU HRO CAU	15,000 lm	4000 K	146 lm/W	Symmetrical
911401583043	BY570P LED250/840 PSD WB CAU	25,000 lm	4000 K	139 lm/W	Beam angle 90°
911401583143	BY570P LED250/840 PSD NB CAU	25,000 lm	4000 K	139 lm/W	Beam angle 60°
911401583243	BY570P LED250/840 PSD HRO CAU	25,000 lm	4000 K	139 lm/W	Symmetrical
911401584743	BY570P LED250/840 PSU WB CAU CL	25,000 lm	4000 K	146 lm/W	Beam angle 90°
911401584843	BY570P LED250/865 PSU WB CAU CL	25,000 lm	6500 K	146 lm/W	Beam angle 90°
911401585243	BY570P LED250/850 PSU WB JP	25,000 lm	5000 K	146 lm/W	Beam angle 90°
911401571343	BY570X LED100/NW SIA WB PP	10,000 lm	4000 K	150 lm/W	Beam angle 90°
911401571443	BY570X LED100/NW SIA NB PP	10,000 lm	4000 K	150 lm/W	Beam angle 60°
911401571543	BY570X LED100/NW SIA HRO PP	10,000 lm	4000 K	150 lm/W	Symmetrical
911401571643	BY570X LED100/CW SIA WB PP	10,000 lm	6500 K	150 lm/W	Beam angle 90°
911401571743	BY570X LED100/CW SIA NB PP	10,000 lm	6500 K	150 lm/W	Beam angle 60°
911401571843	BY570X LED100/CW SIA HRO PP	10,000 lm	6500 K	150 lm/W	Symmetrical
911401571943	BY570X LED150/NW SIA WB PP	15,000 lm	4000 K	139 lm/W	Beam angle 90°
911401572043	BY570X LED150/NW SIA NB PP	15,000 lm	4000 K	139 lm/W	Beam angle 60°
911401572143	BY570X LED150/NW SIA HRO PP	15,000 lm	4000 K	139 lm/W	Symmetrical
911401572243	BY570X LED150/CW SIA WB PP	15,000 lm	6500 K	139 lm/W	Beam angle 90°
911401572343	BY570X LED150/CW SIA NB PP	15,000 lm	6500 K	139 lm/W	Beam angle 60°
911401572443	BY570X LED150/CW SIA HRO PP	15,000 lm	6500 K	139 lm/W	Symmetrical
911401572543	BY570X LED200/NW SIA WB PP	20,000 lm	4000 K	143 lm/W	Beam angle 90°
911401572643	BY570X LED200/NW SIA NB PP	20,000 lm	4000 K	143 lm/W	Beam angle 60°
911401572743	BY570X LED200/NW SIA HRO PP	20,000 lm	4000 K	143 lm/W	Symmetrical
911401572843	BY570X LED200/CW SIA WB PP	20,000 lm	6500 K	143 lm/W	Beam angle 90°
911401572943	BY570X LED200/CW SIA NB PP	20,000 lm	6500 K	143 lm/W	Beam angle 60°
911401573043	BY570X LED200/CW SIA HRO PP	20,000 lm	6500 K	143 lm/W	Symmetrical
911401573143	BY570X LED250/NW SIA WB PP	25,000 lm	4000 K	142 lm/W	Beam angle 90°
911401573243	BY570X LED250/NW SIA NB PP	25,000 lm	4000 K	142 lm/W	Beam angle 60°
911401573343	BY570X LED250/NW SIA HRO PP	25,000 lm	4000 K	142 lm/W	Symmetrical
911401573443	BY570X LED250/CW SIA WB PP	25,000 lm	6500 K	142 lm/W	Beam angle 90°
911401573543	BY570X LED250/CW SIA NB PP	25,000 lm	6500 K	142 lm/W	Beam angle 60°
911401573643	BY570X LED250/CW SIA HRO PP	25,000 lm	6500 K	142 lm/W	Symmetrical
911401578543	BY570X LED100/NW SIA WB SP	10,000 lm	4000 K	150 lm/W	Beam angle 90°
911401578643	BY570X LED100/NW SIA NB SP	10,000 lm	4000 K	150 lm/W	Beam angle 60°
911401578743	BY570X LED100/NW SIA HRO SP	10,000 lm	4000 K	150 lm/W	Symmetrical
911401578843	BY570X LED100/CW SIA WB SP	10,000 lm	6500 K	150 lm/W	Beam angle 90°

Order Code	Full Product Name	Luminous Flux	Correlated Color Temperature (Nom)	Luminous Efficacy (rated) (Nom)	Optic type
911401578943	BY570X LED100/CW SIA NB SP	10,000 lm	6500 K	150 lm/W	Beam angle 60°
911401579043	BY570X LED100/CW SIA HRO SP	10,000 lm	6500 K	150 lm/W	Symmetrical
911401579143	BY570X LED150/NW SIA WB SP	15,000 lm	4000 K	139 lm/W	Beam angle 90°
911401579243	BY570X LED150/NW SIA NB SP	15,000 lm	4000 K	139 lm/W	Beam angle 60°
911401579343	BY570X LED150/NW SIA HRO SP	15,000 lm	4000 K	139 lm/W	Symmetrical
911401579443	BY570X LED150/CW SIA WB SP	15,000 lm	6500 K	139 lm/W	Beam angle 90°
911401579543	BY570X LED150/CW SIA NB SP	15,000 lm	6500 K	139 lm/W	Beam angle 60°
911401579643	BY570X LED150/CW SIA HRO SP	15,000 lm	6500 K	139 lm/W	Symmetrical
911401579743	BY570X LED200/NW SIA WB SP	20,000 lm	4000 K	143 lm/W	Beam angle 90°
911401579843	BY570X LED200/NW SIA NB SP	20,000 lm	4000 K	143 lm/W	Beam angle 60°
911401579943	BY570X LED200/NW SIA HRO SP	20,000 lm	4000 K	143 lm/W	Symmetrical
911401580043	BY570X LED200/CW SIA WB SP	20,000 lm	6500 K	143 lm/W	Beam angle 90°
911401580143	BY570X LED200/CW SIA NB SP	20,000 lm	6500 K	143 lm/W	Beam angle 60°
911401580243	BY570X LED200/CW SIA HRO SP	20,000 lm	6500 K	143 lm/W	Symmetrical
911401580343	BY570X LED250/NW SIA WB SP	25,000 lm	4000 K	142 lm/W	Beam angle 90°
911401580443	BY570X LED250/NW SIA NB SP	25,000 lm	4000 K	142 lm/W	Beam angle 60°
911401580543	BY570X LED250/NW SIA HRO SP	25,000 lm	4000 K	142 lm/W	Symmetrical
911401580643	BY570X LED250/CW SIA WB SP	25,000 lm	6500 K	142 lm/W	Beam angle 90°
911401580743	BY570X LED250/CW SIA NB SP	25,000 lm	6500 K	142 lm/W	Beam angle 60°
911401580843	BY570X LED250/CW SIA HRO SP	25,000 lm	6500 K	142 lm/W	Symmetrical
911401583343	BY570X LED100/840 SIA WB CAU	10,000 lm	4000 K	150 lm/W	Beam angle 90°
911401583443	BY570X LED100/840 SIA NB CAU	10,000 lm	4000 K	150 lm/W	Beam angle 60°
911401583543	BY570X LED100/840 SIA HRO CAU	10,000 lm	4000 K	150 lm/W	Symmetrical
911401583643	BY570X LED150/840 SIA WB CAU	15,000 lm	4000 K	139 lm/W	Beam angle 90°
911401583743	BY570X LED150/840 SIA NB CAU	15,000 lm	4000 K	139 lm/W	Beam angle 60°
911401583843	BY570X LED150/840 SIA HRO CAU	15,000 lm	4000 K	139 lm/W	Symmetrical
911401583943	BY570X LED200/840 SIA WB CAU	20,000 lm	4000 K	143 lm/W	Beam angle 90°
911401584043	BY570X LED200/840 SIA NB CAU	20,000 lm	4000 K	143 lm/W	Beam angle 60°
911401584143	BY570X LED200/840 SIA HRO CAU	20,000 lm	4000 K	143 lm/W	Symmetrical
911401584243	BY570X LED250/840 SIA WB CAU	25,000 lm	4000 K	142 lm/W	Beam angle 90°
911401584343	BY570X LED250/840 SIA NB CAU	25,000 lm	4000 K	142 lm/W	Beam angle 60°
911401584443	BY570X LED250/840 SIA HRO CAU	25,000 lm	4000 K	142 lm/W	Symmetrical
911401567743	BY570P LED200/NW PSU WB PP	20,000 lm	4000 K	146 lm/W	Beam angle 90°
911401567843	BY570P LED200/NW PSU NB PP	20,000 lm	4000 K	146 lm/W	Beam angle 60°
911401567943	BY570P LED200/NW PSU HRO PP	20,000 lm	4000 K	146 lm/W	Symmetrical
911401568043	BY570P LED200/CW PSU WB PP	20,000 lm	6500 K	146 lm/W	Beam angle 90°
911401568143	BY570P LED200/CW PSU NB PP	20,000 lm	6500 K	146 lm/W	Beam angle 60°
911401568243	BY570P LED200/CW PSU HRO PP	20,000 lm	6500 K	146 lm/W	Symmetrical
911401570143	BY570P LED200/NW PSD WB PP	20,000 lm	4000 K	141 lm/W	Beam angle 90°
911401570243	BY570P LED200/NW PSD NB PP	20,000 lm	4000 K	141 lm/W	Beam angle 60°
911401570343	BY570P LED200/NW PSD HRO PP	20,000 lm	4000 K	141 lm/W	Symmetrical
911401570443	BY570P LED200/CW PSD WB PP	20,000 lm	6500 K	141 lm/W	Beam angle 90°

Order Code	Full Product Name	Luminous Flux	Correlated Color Temperature (Nom)	Luminous Efficacy (rated) (Nom)	Optic type
911401570543	BY570P LED200/CW PSD NB PP	20,000 lm	6500 K	141 lm/W	Beam angle 60°
911401570643	BY570P LED200/CW PSD HRO PP	20,000 lm	6500 K	141 lm/W	Symmetrical
911401574943	BY570P LED200/NW PSU WB SP	20,000 lm	4000 K	146 lm/W	Beam angle 90°
911401575043	BY570P LED200/NW PSU NB SP	20,000 lm	4000 K	146 lm/W	Beam angle 60°
911401575143	BY570P LED200/NW PSU HRO SP	20,000 lm	4000 K	146 lm/W	Symmetrical
911401575243	BY570P LED200/CW PSU WB SP	20,000 lm	6500 K	146 lm/W	Beam angle 90°
911401575343	BY570P LED200/CW PSU NB SP	20,000 lm	6500 K	146 lm/W	Beam angle 60°
911401575443	BY570P LED200/CW PSU HRO SP	20,000 lm	6500 K	146 lm/W	Symmetrical
911401577343	BY570P LED200/NW PSD WB SP	20,000 lm	4000 K	141 lm/W	Beam angle 90°
911401577443	BY570P LED200/NW PSD NB SP	20,000 lm	4000 K	141 lm/W	Beam angle 60°
911401577543	BY570P LED200/NW PSD HRO SP	20,000 lm	4000 K	141 lm/W	Symmetrical
911401577643	BY570P LED200/CW PSD WB SP	20,000 lm	6500 K	141 lm/W	Beam angle 90°
911401577743	BY570P LED200/CW PSD NB SP	20,000 lm	6500 K	141 lm/W	Beam angle 60°
911401577843	BY570P LED200/CW PSD HRO SP	20,000 lm	6500 K	141 lm/W	Symmetrical
911401581543	BY570P LED200/840 PSU WB CAU	15,000 lm	4000 K	146 lm/W	Beam angle 90°
911401581643	BY570P LED200/840 PSU NB CAU	15,000 lm	4000 K	146 lm/W	Beam angle 60°
911401581743	BY570P LED200/840 PSU HRO CAU	15,000 lm	4000 K	146 lm/W	Symmetrical
911401582743	BY570P LED200/840 PSD WB CAU	25,000 lm	4000 K	141 lm/W	Beam angle 90°
911401582843	BY570P LED200/840 PSD NB CAU	25,000 lm	4000 K	141 lm/W	Beam angle 60°
911401582943	BY570P LED200/840 PSD HRO CAU	25,000 lm	4000 K	141 lm/W	Symmetrical
911401584543	BY570P LED200/840 PSU WB CAU CL	20,000 lm	4000 K	146 lm/W	Beam angle 90°
911401584643	BY570P LED200/865 PSU WB CAU CL	20,000 lm	6500 K	146 lm/W	Beam angle 90°
911401585143	BY570P LED200/850 PSU WB JP	20,000 lm	5000 K	146 lm/W	Beam angle 90°

Operating and Electrical

Order Code	Full Product Name	Input Voltage	Power Consumption
911401566543	BY570P LED100/NW PSU WB PP	220 to 240 V	64 W
911401566643	BY570P LED100/NW PSU NB PP	220 to 240 V	64 W
911401566743	BY570P LED100/NW PSU HRO PP	220 to 240 V	64 W
911401566843	BY570P LED100/CW PSU WB PP	220 to 240 V	64 W
911401566943	BY570P LED100/CW PSU NB PP	220 to 240 V	64 W
911401567043	BY570P LED100/CW PSU HRO PP	220 to 240 V	64 W
911401567143	BY570P LED150/NW PSU WB PP	220 to 240 V	105 W
911401567243	BY570P LED150/NW PSU NB PP	220 to 240 V	105 W
911401567343	BY570P LED150/NW PSU HRO PP	220 to 240 V	105 W
911401567443	BY570P LED150/CW PSU WB PP	220 to 240 V	105 W
911401567543	BY570P LED150/CW PSU NB PP	220 to 240 V	105 W
911401567643	BY570P LED150/CW PSU HRO PP	220 to 240 V	105 W
911401568943	BY570P LED100/NW PSD WB PP	220 to 240 V	67 W
911401569043	BY570P LED100/NW PSD NB PP	220 to 240 V	67 W
911401569143	BY570P LED100/NW PSD HRO PP	220 to 240 V	67 W

Order Code	Full Product Name	Input Voltage	Power Consumption
911401569243	BY570P LED100/CW PSD WB PP	220 to 240 V	67 W
911401569343	BY570P LED100/CW PSD NB PP	220 to 240 V	67 W
911401569443	BY570P LED100/CW PSD HRO PP	220 to 240 V	67 W
911401569543	BY570P LED150/NW PSD WB PP	220 to 240 V	110 W
911401569643	BY570P LED150/NW PSD NB PP	220 to 240 V	110 W
911401569743	BY570P LED150/NW PSD HRO PP	220 to 240 V	110 W
911401569843	BY570P LED150/CW PSD WB PP	220 to 240 V	110 W
911401569943	BY570P LED150/CW PSD NB PP	220 to 240 V	110 W
911401570043	BY570P LED150/CW PSD HRO PP	220 to 240 V	110 W
911401573743	BY570P LED100/NW PSU WB SP	220 to 240 V	64 W
911401573843	BY570P LED100/NW PSU NB SP	220 to 240 V	64 W
911401573943	BY570P LED100/NW PSU HRO SP	220 to 240 V	64 W
911401574043	BY570P LED100/CW PSU WB SP	220 to 240 V	64 W
911401574143	BY570P LED100/CW PSU NB SP	220 to 240 V	64 W
911401574243	BY570P LED100/CW PSU HRO SP	220 to 240 V	64 W
911401574343	BY570P LED150/NW PSU WB SP	220 to 240 V	105 W
911401574443	BY570P LED150/NW PSU NB SP	220 to 240 V	105 W
911401574543	BY570P LED150/NW PSU HRO SP	220 to 240 V	105 W
911401574643	BY570P LED150/CW PSU WB SP	220 to 240 V	105 W
911401574743	BY570P LED150/CW PSU NB SP	220 to 240 V	105 W
911401574843	BY570P LED150/CW PSU HRO SP	220 to 240 V	105 W
911401576143	BY570P LED100/NW PSD WB SP	220 to 240 V	67 W
911401576243	BY570P LED100/NW PSD NB SP	220 to 240 V	67 W
911401576343	BY570P LED100/NW PSD HRO SP	220 to 240 V	67 W
911401576443	BY570P LED100/CW PSD WB SP	220 to 240 V	67 W
911401576543	BY570P LED100/CW PSD NB SP	220 to 240 V	67 W
911401576643	BY570P LED100/CW PSD HRO SP	220 to 240 V	67 W
911401576743	BY570P LED150/NW PSD WB SP	220 to 240 V	110 W
911401576843	BY570P LED150/NW PSD NB SP	220 to 240 V	110 W
911401576943	BY570P LED150/NW PSD HRO SP	220 to 240 V	110 W
911401577043	BY570P LED150/CW PSD WB SP	220 to 240 V	110 W
911401577143	BY570P LED150/CW PSD NB SP	220 to 240 V	110 W
911401577243	BY570P LED150/CW PSD HRO SP	220 to 240 V	110 W
911401580943	BY570P LED100/840 PSU WB CAU	220 to 240 V	64 W
911401581043	BY570P LED100/840 PSU NB CAU	220 to 240 V	64 W
911401581143	BY570P LED100/840 PSU HRO CAU	220 to 240 V	64 W
911401581243	BY570P LED150/840 PSU WB CAU	220 to 240 V	105 W
911401581343	BY570P LED150/840 PSU NB CAU	220 to 240 V	105 W
911401581443	BY570P LED150/840 PSU HRO CAU	220 to 240 V	105 W
911401582143	BY570P LED100/840 PSD WB CAU	220 to 240 V	67 W
911401582243	BY570P LED100/840 PSD NB CAU	220 to 240 V	67 W
911401582343	BY570P LED100/840 PSD HRO CAU	220 to 240 V	67 W

Order Code	Full Product Name	Input Voltage	Power Consumption
911401582443	BY570P LED150/840 PSD WB CAU	220 to 240 V	110 W
911401582543	BY570P LED150/840 PSD NB CAU	220 to 240 V	110 W
911401582643	BY570P LED150/840 PSD HRO CAU	220 to 240 V	110 W
911401584943	BY570P LED100/850 PSU WB JP	200 V	64 W
911401585043	BY570P LED150/850 PSU WB JP	200 V	105 W
911401568343	BY570P LED250/NW PSU WB PP	220 to 240 V	171 W
911401568443	BY570P LED250/NW PSU NB PP	220 to 240 V	171 W
911401568543	BY570P LED250/NW PSU HRO PP	220 to 240 V	171 W
911401568643	BY570P LED250/CW PSU WB PP	220 to 240 V	171 W
911401568743	BY570P LED250/CW PSU NB PP	220 to 240 V	171 W
911401568843	BY570P LED250/CW PSU HRO PP	220 to 240 V	64 W
911401570743	BY570P LED250/NW PSD WB PP	220 to 240 V	181 W
911401570843	BY570P LED250/NW PSD NB PP	220 to 240 V	181 W
911401570943	BY570P LED250/NW PSD HRO PP	220 to 240 V	181 W
911401571043	BY570P LED250/CW PSD WB PP	220 to 240 V	181 W
911401571143	BY570P LED250/CW PSD NB PP	220 to 240 V	181 W
911401571243	BY570P LED250/CW PSD HRO PP	220 to 240 V	181 W
911401575543	BY570P LED250/NW PSU WB SP	220 to 240 V	171 W
911401575643	BY570P LED250/NW PSU NB SP	220 to 240 V	171 W
911401575743	BY570P LED250/NW PSU HRO SP	220 to 240 V	171 W
911401575843	BY570P LED250/CW PSU WB SP	220 to 240 V	171 W
911401575943	BY570P LED250/CW PSU NB SP	220 to 240 V	171 W
911401576043	BY570P LED250/CW PSU HRO SP	220 to 240 V	171 W
911401577943	BY570P LED250/NW PSD WB SP	220 to 240 V	181 W
911401578043	BY570P LED250/NW PSD NB SP	220 to 240 V	181 W
911401578143	BY570P LED250/NW PSD HRO SP	220 to 240 V	181 W
911401578243	BY570P LED250/CW PSD WB SP	220 to 240 V	181 W
911401578343	BY570P LED250/CW PSD NB SP	220 to 240 V	181 W
911401578443	BY570P LED250/CW PSD HRO SP	220 to 240 V	181 W
911401581843	BY570P LED250/840 PSU WB CAU	220 to 240 V	171 W
911401581943	BY570P LED250/840 PSU NB CAU	220 to 240 V	171 W
911401582043	BY570P LED250/840 PSU HRO CAU	220 to 240 V	171 W
911401583043	BY570P LED250/840 PSD WB CAU	220 to 240 V	181 W
911401583143	BY570P LED250/840 PSD NB CAU	220 to 240 V	181 W
911401583243	BY570P LED250/840 PSD HRO CAU	220 to 240 V	181 W
911401584743	BY570P LED250/840 PSU WB CAU CL	220 to 240 V	171 W
911401584843	BY570P LED250/865 PSU WB CAU CL	220 to 240 V	171 W
911401585243	BY570P LED250/850 PSU WB JP	200 V	171 W
911401571343	BY570X LED100/NW SIA WB PP	220 to 240 V	67 W
911401571443	BY570X LED100/NW SIA NB PP	220 to 240 V	67 W
911401571543	BY570X LED100/NW SIA HRO PP	220 to 240 V	67 W
911401571643	BY570X LED100/CW SIA WB PP	220 to 240 V	67 W

Order Code	Full Product Name	Input Voltage	Power Consumption
911401571743	BY570X LED100/CW SIA NB PP	220 to 240 V	67 W
911401571843	BY570X LED100/CW SIA HRO PP	220 to 240 V	67 W
911401571943	BY570X LED150/NW SIA WB PP	220 to 240 V	108 W
911401572043	BY570X LED150/NW SIA NB PP	220 to 240 V	108 W
911401572143	BY570X LED150/NW SIA HRO PP	220 to 240 V	108 W
911401572243	BY570X LED150/CW SIA WB PP	220 to 240 V	108 W
911401572343	BY570X LED150/CW SIA NB PP	220 to 240 V	108 W
911401572443	BY570X LED150/CW SIA HRO PP	220 to 240 V	108 W
911401572543	BY570X LED200/NW SIA WB PP	220 to 240 V	140 W
911401572643	BY570X LED200/NW SIA NB PP	220 to 240 V	140 W
911401572743	BY570X LED200/NW SIA HRO PP	220 to 240 V	140 W
911401572843	BY570X LED200/CW SIA WB PP	220 to 240 V	140 W
911401572943	BY570X LED200/CW SIA NB PP	220 to 240 V	140 W
911401573043	BY570X LED200/CW SIA HRO PP	220 to 240 V	140 W
911401573143	BY570X LED250/NW SIA WB PP	220 to 240 V	177 W
911401573243	BY570X LED250/NW SIA NB PP	220 to 240 V	177 W
911401573343	BY570X LED250/NW SIA HRO PP	220 to 240 V	177 W
911401573443	BY570X LED250/CW SIA WB PP	220 to 240 V	177 W
911401573543	BY570X LED250/CW SIA NB PP	220 to 240 V	177 W
911401573643	BY570X LED250/CW SIA HRO PP	220 to 240 V	177 W
911401578543	BY570X LED100/NW SIA WB SP	220 to 240 V	67 W
911401578643	BY570X LED100/NW SIA NB SP	220 to 240 V	67 W
911401578743	BY570X LED100/NW SIA HRO SP	220 to 240 V	67 W
911401578843	BY570X LED100/CW SIA WB SP	220 to 240 V	67 W
911401578943	BY570X LED100/CW SIA NB SP	220 to 240 V	67 W
911401579043	BY570X LED100/CW SIA HRO SP	220 to 240 V	67 W
911401579143	BY570X LED150/NW SIA WB SP	220 to 240 V	108 W
911401579243	BY570X LED150/NW SIA NB SP	220 to 240 V	108 W
911401579343	BY570X LED150/NW SIA HRO SP	220 to 240 V	108 W
911401579443	BY570X LED150/CW SIA WB SP	220 to 240 V	108 W
911401579543	BY570X LED150/CW SIA NB SP	220 to 240 V	108 W
911401579643	BY570X LED150/CW SIA HRO SP	220 to 240 V	108 W
911401579743	BY570X LED200/NW SIA WB SP	220 to 240 V	140 W
911401579843	BY570X LED200/NW SIA NB SP	220 to 240 V	140 W
911401579943	BY570X LED200/NW SIA HRO SP	220 to 240 V	140 W
911401580043	BY570X LED200/CW SIA WB SP	220 to 240 V	140 W
911401580143	BY570X LED200/CW SIA NB SP	220 to 240 V	140 W
911401580243	BY570X LED200/CW SIA HRO SP	220 to 240 V	140 W
911401580343	BY570X LED250/NW SIA WB SP	220 to 240 V	177 W
911401580443	BY570X LED250/NW SIA NB SP	220 to 240 V	177 W
911401580543	BY570X LED250/NW SIA HRO SP	220 to 240 V	177 W
911401580643	BY570X LED250/CW SIA WB SP	220 to 240 V	177 W

Order Code	Full Product Name	Input Voltage	Power Consumption
911401580743	BY570X LED250/CW SIA NB SP	220 to 240 V	177 W
911401580843	BY570X LED250/CW SIA HRO SP	220 to 240 V	177 W
911401583343	BY570X LED100/840 SIA WB CAU	220 to 240 V	67 W
911401583443	BY570X LED100/840 SIA NB CAU	220 to 240 V	67 W
911401583543	BY570X LED100/840 SIA HRO CAU	220 to 240 V	67 W
911401583643	BY570X LED150/840 SIA WB CAU	220 to 240 V	108 W
911401583743	BY570X LED150/840 SIA NB CAU	220 to 240 V	108 W
911401583843	BY570X LED150/840 SIA HRO CAU	220 to 240 V	108 W
911401583943	BY570X LED200/840 SIA WB CAU	220 to 240 V	140 W
911401584043	BY570X LED200/840 SIA NB CAU	220 to 240 V	140 W
911401584143	BY570X LED200/840 SIA HRO CAU	220 to 240 V	140 W
911401584243	BY570X LED250/840 SIA WB CAU	220 to 240 V	177 W
911401584343	BY570X LED250/840 SIA NB CAU	220 to 240 V	177 W
911401584443	BY570X LED250/840 SIA HRO CAU	220 to 240 V	177 W
911401567743	BY570P LED200/NW PSU WB PP	220 to 240 V	137 W
911401567843	BY570P LED200/NW PSU NB PP	220 to 240 V	137 W
911401567943	BY570P LED200/NW PSU HRO PP	220 to 240 V	137 W
911401568043	BY570P LED200/CW PSU WB PP	220 to 240 V	137 W
911401568143	BY570P LED200/CW PSU NB PP	220 to 240 V	137 W
911401568243	BY570P LED200/CW PSU HRO PP	220 to 240 V	137 W
911401570143	BY570P LED200/NW PSD WB PP	220 to 240 V	142 W
911401570243	BY570P LED200/NW PSD NB PP	220 to 240 V	142 W
911401570343	BY570P LED200/NW PSD HRO PP	220 to 240 V	142 W
911401570443	BY570P LED200/CW PSD WB PP	220 to 240 V	142 W
911401570543	BY570P LED200/CW PSD NB PP	220 to 240 V	142 W
911401570643	BY570P LED200/CW PSD HRO PP	220 to 240 V	142 W
911401574943	BY570P LED200/NW PSU WB SP	220 to 240 V	137 W
911401575043	BY570P LED200/NW PSU NB SP	220 to 240 V	137 W
911401575143	BY570P LED200/NW PSU HRO SP	220 to 240 V	137 W
911401575243	BY570P LED200/CW PSU WB SP	220 to 240 V	137 W
911401575343	BY570P LED200/CW PSU NB SP	220 to 240 V	137 W
911401575443	BY570P LED200/CW PSU HRO SP	220 to 240 V	137 W
911401577343	BY570P LED200/NW PSD WB SP	220 to 240 V	142 W
911401577443	BY570P LED200/NW PSD NB SP	220 to 240 V	142 W
911401577543	BY570P LED200/NW PSD HRO SP	220 to 240 V	142 W
911401577643	BY570P LED200/CW PSD WB SP	220 to 240 V	142 W
911401577743	BY570P LED200/CW PSD NB SP	220 to 240 V	142 W
911401577843	BY570P LED200/CW PSD HRO SP	220 to 240 V	142 W
911401581543	BY570P LED200/840 PSU WB CAU	220 to 240 V	137 W
911401581643	BY570P LED200/840 PSU NB CAU	220 to 240 V	137 W
911401581743	BY570P LED200/840 PSU HRO CAU	220 to 240 V	137 W
911401582743	BY570P LED200/840 PSD WB CAU	220 to 240 V	142 W

Order Code	Full Product Name	Input Voltage	Power Consumption
911401582843	BY570P LED200/840 PSD NB CAU	220 to 240 V	142 W
911401582943	BY570P LED200/840 PSD HRO CAU	220 to 240 V	142 W
911401584543	BY570P LED200/840 PSU WB CAU CL	220 to 240 V	137 W
911401584643	BY570P LED200/865 PSU WB CAU CL	220 to 240 V	137 W
911401585143	BY570P LED200/850 PSU WB JP	200 V	137 W

Controls and Dimming

Order Code	Full Product Name	Dimmable	Maximum dim level
911401566543	BY570P LED100/NW PSU WB PP	-	Not applicable
911401566643	BY570P LED100/NW PSU NB PP	-	Not applicable
911401566743	BY570P LED100/NW PSU HRO PP	-	Not applicable
911401566843	BY570P LED100/CW PSU WB PP	-	Not applicable
911401566943	BY570P LED100/CW PSU NB PP	-	Not applicable
911401567043	BY570P LED100/CW PSU HRO PP	-	Not applicable
911401567143	BY570P LED150/NW PSU WB PP	-	Not applicable
911401567243	BY570P LED150/NW PSU NB PP	-	Not applicable
911401567343	BY570P LED150/NW PSU HRO PP	-	Not applicable
911401567443	BY570P LED150/CW PSU WB PP	-	Not applicable
911401567543	BY570P LED150/CW PSU NB PP	-	Not applicable
911401567643	BY570P LED150/CW PSU HRO PP	-	Not applicable
911401568943	BY570P LED100/NW PSD WB PP	DALI	10%
911401569043	BY570P LED100/NW PSD NB PP	DALI	10%
911401569143	BY570P LED100/NW PSD HRO PP	DALI	10%
911401569243	BY570P LED100/CW PSD WB PP	DALI	10%
911401569343	BY570P LED100/CW PSD NB PP	DALI	10%
911401569443	BY570P LED100/CW PSD HRO PP	DALI	10%
911401569543	BY570P LED150/NW PSD WB PP	DALI	10%
911401569643	BY570P LED150/NW PSD NB PP	DALI	10%
911401569743	BY570P LED150/NW PSD HRO PP	DALI	10%
911401569843	BY570P LED150/CW PSD WB PP	DALI	10%
911401569943	BY570P LED150/CW PSD NB PP	DALI	10%
911401570043	BY570P LED150/CW PSD HRO PP	DALI	10%
911401573743	BY570P LED100/NW PSU WB SP	-	Not applicable
911401573843	BY570P LED100/NW PSU NB SP	-	Not applicable
911401573943	BY570P LED100/NW PSU HRO SP	-	Not applicable
911401574043	BY570P LED100/CW PSU WB SP	-	Not applicable
911401574143	BY570P LED100/CW PSU NB SP	-	Not applicable
911401574243	BY570P LED100/CW PSU HRO SP	-	Not applicable
911401574343	BY570P LED150/NW PSU WB SP	-	Not applicable
911401574443	BY570P LED150/NW PSU NB SP	-	Not applicable
911401574543	BY570P LED150/NW PSU HRO SP	-	Not applicable

Order Code	Full Product Name	Dimmable	Maximum dim level
911401574643	BY570P LED150/CW PSU WB SP	-	Not applicable
911401574743	BY570P LED150/CW PSU NB SP	-	Not applicable
911401574843	BY570P LED150/CW PSU HRO SP	-	Not applicable
911401576143	BY570P LED100/NW PSD WB SP	DALI	10%
911401576243	BY570P LED100/NW PSD NB SP	DALI	10%
911401576343	BY570P LED100/NW PSD HRO SP	DALI	10%
911401576443	BY570P LED100/CW PSD WB SP	DALI	10%
911401576543	BY570P LED100/CW PSD NB SP	DALI	10%
911401576643	BY570P LED100/CW PSD HRO SP	DALI	10%
911401576743	BY570P LED150/NW PSD WB SP	DALI	10%
911401576843	BY570P LED150/NW PSD NB SP	DALI	10%
911401576943	BY570P LED150/NW PSD HRO SP	DALI	10%
911401577043	BY570P LED150/CW PSD WB SP	DALI	10%
911401577143	BY570P LED150/CW PSD NB SP	DALI	10%
911401577243	BY570P LED150/CW PSD HRO SP	DALI	10%
911401580943	BY570P LED100/840 PSU WB CAU	-	Not applicable
911401581043	BY570P LED100/840 PSU NB CAU	-	Not applicable
911401581143	BY570P LED100/840 PSU HRO CAU	-	Not applicable
911401581243	BY570P LED150/840 PSU WB CAU	-	Not applicable
911401581343	BY570P LED150/840 PSU NB CAU	-	Not applicable
911401581443	BY570P LED150/840 PSU HRO CAU	-	Not applicable
911401582143	BY570P LED100/840 PSD WB CAU	DALI	10%
911401582243	BY570P LED100/840 PSD NB CAU	DALI	10%
911401582343	BY570P LED100/840 PSD HRO CAU	DALI	10%
911401582443	BY570P LED150/840 PSD WB CAU	DALI	10%
911401582543	BY570P LED150/840 PSD NB CAU	DALI	10%
911401582643	BY570P LED150/840 PSD HRO CAU	DALI	10%
911401584943	BY570P LED100/850 PSU WB JP	-	Not applicable
911401585043	BY570P LED150/850 PSU WB JP	-	Not applicable
911401568343	BY570P LED250/NW PSU WB PP	-	Not applicable
911401568443	BY570P LED250/NW PSU NB PP	-	Not applicable
911401568543	BY570P LED250/NW PSU HRO PP	-	Not applicable
911401568643	BY570P LED250/CW PSU WB PP	-	Not applicable
911401568743	BY570P LED250/CW PSU NB PP	-	Not applicable
911401568843	BY570P LED250/CW PSU HRO PP	-	Not applicable
911401570743	BY570P LED250/NW PSD WB PP	DALI	10%
911401570843	BY570P LED250/NW PSD NB PP	DALI	10%
911401570943	BY570P LED250/NW PSD HRO PP	DALI	10%
911401571043	BY570P LED250/CW PSD WB PP	DALI	10%
911401571143	BY570P LED250/CW PSD NB PP	DALI	10%
911401571243	BY570P LED250/CW PSD HRO PP	DALI	10%
911401575543	BY570P LED250/NW PSU WB SP	-	Not applicable

Order Code	Full Product Name	Dimmable	Maximum dim level
911401575643	BY570P LED250/NW PSU NB SP	-	Not applicable
911401575743	BY570P LED250/NW PSU HRO SP	-	Not applicable
911401575843	BY570P LED250/CW PSU WB SP	-	Not applicable
911401575943	BY570P LED250/CW PSU NB SP	-	Not applicable
911401576043	BY570P LED250/CW PSU HRO SP	-	Not applicable
911401577943	BY570P LED250/NW PSD WB SP	DALI	10%
911401578043	BY570P LED250/NW PSD NB SP	DALI	10%
911401578143	BY570P LED250/NW PSD HRO SP	DALI	10%
911401578243	BY570P LED250/CW PSD WB SP	DALI	10%
911401578343	BY570P LED250/CW PSD NB SP	DALI	10%
911401578443	BY570P LED250/CW PSD HRO SP	DALI	10%
911401581843	BY570P LED250/840 PSU WB CAU	-	Not applicable
911401581943	BY570P LED250/840 PSU NB CAU	-	Not applicable
911401582043	BY570P LED250/840 PSU HRO CAU	-	Not applicable
911401583043	BY570P LED250/840 PSD WB CAU	DALI	10%
911401583143	BY570P LED250/840 PSD NB CAU	DALI	10%
911401583243	BY570P LED250/840 PSD HRO CAU	DALI	10%
911401584743	BY570P LED250/840 PSU WB CAU CL	-	Not applicable
911401584843	BY570P LED250/865 PSU WB CAU CL	-	Not applicable
911401585243	BY570P LED250/850 PSU WB JP	-	Not applicable
911401571343	BY570X LED100/NW SIA WB PP	Wireless Dim	1%
911401571443	BY570X LED100/NW SIA NB PP	Wireless Dim	1%
911401571543	BY570X LED100/NW SIA HRO PP	Wireless Dim	1%
911401571643	BY570X LED100/CW SIA WB PP	Wireless Dim	1%
911401571743	BY570X LED100/CW SIA NB PP	Wireless Dim	1%
911401571843	BY570X LED100/CW SIA HRO PP	Wireless Dim	1%
911401571943	BY570X LED150/NW SIA WB PP	Wireless Dim	1%
911401572043	BY570X LED150/NW SIA NB PP	Wireless Dim	1%
911401572143	BY570X LED150/NW SIA HRO PP	Wireless Dim	1%
911401572243	BY570X LED150/CW SIA WB PP	Wireless Dim	1%
911401572343	BY570X LED150/CW SIA NB PP	Wireless Dim	1%
911401572443	BY570X LED150/CW SIA HRO PP	Wireless Dim	1%
911401572543	BY570X LED200/NW SIA WB PP	Wireless Dim	1%
911401572643	BY570X LED200/NW SIA NB PP	Wireless Dim	1%
911401572743	BY570X LED200/NW SIA HRO PP	Wireless Dim	1%
911401572843	BY570X LED200/CW SIA WB PP	Wireless Dim	1%
911401572943	BY570X LED200/CW SIA NB PP	Wireless Dim	1%
911401573043	BY570X LED200/CW SIA HRO PP	Wireless Dim	1%
911401573143	BY570X LED250/NW SIA WB PP	Wireless Dim	1%
911401573243	BY570X LED250/NW SIA NB PP	Wireless Dim	1%
911401573343	BY570X LED250/NW SIA HRO PP	Wireless Dim	1%
911401573443	BY570X LED250/CW SIA WB PP	Wireless Dim	1%

Order Code	Full Product Name	Dimmable	Maximum dim level
911401573543	BY570X LED250/CW SIA NB PP	Wireless Dim	1%
911401573643	BY570X LED250/CW SIA HRO PP	Wireless Dim	1%
911401578543	BY570X LED100/NW SIA WB SP	Wireless Dim	1%
911401578643	BY570X LED100/NW SIA NB SP	Wireless Dim	1%
911401578743	BY570X LED100/NW SIA HRO SP	Wireless Dim	1%
911401578843	BY570X LED100/CW SIA WB SP	Wireless Dim	1%
911401578943	BY570X LED100/CW SIA NB SP	Wireless Dim	1%
911401579043	BY570X LED100/CW SIA HRO SP	Wireless Dim	1%
911401579143	BY570X LED150/NW SIA WB SP	Wireless Dim	1%
911401579243	BY570X LED150/NW SIA NB SP	Wireless Dim	1%
911401579343	BY570X LED150/NW SIA HRO SP	Wireless Dim	1%
911401579443	BY570X LED150/CW SIA WB SP	Wireless Dim	1%
911401579543	BY570X LED150/CW SIA NB SP	Wireless Dim	1%
911401579643	BY570X LED150/CW SIA HRO SP	Wireless Dim	1%
911401579743	BY570X LED200/NW SIA WB SP	Wireless Dim	1%
911401579843	BY570X LED200/NW SIA NB SP	Wireless Dim	1%
911401579943	BY570X LED200/NW SIA HRO SP	Wireless Dim	1%
911401580043	BY570X LED200/CW SIA WB SP	Wireless Dim	1%
911401580143	BY570X LED200/CW SIA NB SP	Wireless Dim	1%
911401580243	BY570X LED200/CW SIA HRO SP	Wireless Dim	1%
911401580343	BY570X LED250/NW SIA WB SP	Wireless Dim	1%
911401580443	BY570X LED250/NW SIA NB SP	Wireless Dim	1%
911401580543	BY570X LED250/NW SIA HRO SP	Wireless Dim	1%
911401580643	BY570X LED250/CW SIA WB SP	Wireless Dim	1%
911401580743	BY570X LED250/CW SIA NB SP	Wireless Dim	1%
911401580843	BY570X LED250/CW SIA HRO SP	Wireless Dim	1%
911401583343	BY570X LED100/840 SIA WB CAU	Wireless Dim	1%
911401583443	BY570X LED100/840 SIA NB CAU	Wireless Dim	1%
911401583543	BY570X LED100/840 SIA HRO CAU	Wireless Dim	1%
911401583643	BY570X LED150/840 SIA WB CAU	Wireless Dim	1%
911401583743	BY570X LED150/840 SIA NB CAU	Wireless Dim	1%
911401583843	BY570X LED150/840 SIA HRO CAU	Wireless Dim	1%
911401583943	BY570X LED200/840 SIA WB CAU	Wireless Dim	1%
911401584043	BY570X LED200/840 SIA NB CAU	Wireless Dim	1%
911401584143	BY570X LED200/840 SIA HRO CAU	Wireless Dim	1%
911401584243	BY570X LED250/840 SIA WB CAU	Wireless Dim	1%
911401584343	BY570X LED250/840 SIA NB CAU	Wireless Dim	1%
911401584443	BY570X LED250/840 SIA HRO CAU	Wireless Dim	1%
911401567743	BY570P LED200/NW PSU WB PP	-	Not applicable
911401567843	BY570P LED200/NW PSU NB PP	-	Not applicable
911401567943	BY570P LED200/NW PSU HRO PP	-	Not applicable
911401568043	BY570P LED200/CW PSU WB PP	-	Not applicable

Order Code	Full Product Name	Dimmable	Maximum dim level
911401568143	BY570P LED200/CW PSU NB PP	-	Not applicable
911401568243	BY570P LED200/CW PSU HRO PP	-	Not applicable
911401570143	BY570P LED200/NW PSD WB PP	DALI	10%
911401570243	BY570P LED200/NW PSD NB PP	DALI	10%
911401570343	BY570P LED200/NW PSD HRO PP	DALI	10%
911401570443	BY570P LED200/CW PSD WB PP	DALI	10%
911401570543	BY570P LED200/CW PSD NB PP	DALI	10%
911401570643	BY570P LED200/CW PSD HRO PP	DALI	10%
911401574943	BY570P LED200/NW PSU WB SP	-	Not applicable
911401575043	BY570P LED200/NW PSU NB SP	-	Not applicable
911401575143	BY570P LED200/NW PSU HRO SP	-	Not applicable
911401575243	BY570P LED200/CW PSU WB SP	-	Not applicable
911401575343	BY570P LED200/CW PSU NB SP	-	Not applicable
911401575443	BY570P LED200/CW PSU HRO SP	-	Not applicable
911401577343	BY570P LED200/NW PSD WB SP	DALI	10%
911401577443	BY570P LED200/NW PSD NB SP	DALI	10%
911401577543	BY570P LED200/NW PSD HRO SP	DALI	10%
911401577643	BY570P LED200/CW PSD WB SP	DALI	10%
911401577743	BY570P LED200/CW PSD NB SP	DALI	10%
911401577843	BY570P LED200/CW PSD HRO SP	DALI	10%
911401581543	BY570P LED200/840 PSU WB CAU	-	Not applicable
911401581643	BY570P LED200/840 PSU NB CAU	-	Not applicable
911401581743	BY570P LED200/840 PSU HRO CAU	-	Not applicable
911401582743	BY570P LED200/840 PSD WB CAU	DALI	10%
911401582843	BY570P LED200/840 PSD NB CAU	DALI	10%
911401582943	BY570P LED200/840 PSD HRO CAU	DALI	10%
911401584543	BY570P LED200/840 PSU WB CAU CL	-	Not applicable
911401584643	BY570P LED200/865 PSU WB CAU CL	-	Not applicable
911401585143	BY570P LED200/850 PSU WB JP	-	Not applicable

Approval and Application

Order Code	Full Product Name	Ambient temperature range
911401566543	BY570P LED100/NW PSU WB PP	-30 to +50 °C
911401566643	BY570P LED100/NW PSU NB PP	-30 to +50 °C
911401566743	BY570P LED100/NW PSU HRO PP	-30 to +50 °C
911401566843	BY570P LED100/CW PSU WB PP	-30 to +50 °C
911401566943	BY570P LED100/CW PSU NB PP	-30 to +50 °C
911401567043	BY570P LED100/CW PSU HRO PP	-30 to +50 °C
911401567143	BY570P LED150/NW PSU WB PP	-30 to +50 °C
911401567243	BY570P LED150/NW PSU NB PP	-30 to +50 °C
911401567343	BY570P LED150/NW PSU HRO PP	-30 to +50 °C

Order Code	Full Product Name	Ambient temperature range
911401567443	BY570P LED150/CW PSU WB PP	-30 to +50 °C
911401567543	BY570P LED150/CW PSU NB PP	-30 to +50 °C
911401567643	BY570P LED150/CW PSU HRO PP	-30 to +50 °C
911401568943	BY570P LED100/NW PSD WB PP	-30 to +45 °C
911401569043	BY570P LED100/NW PSD NB PP	-30 to +45 °C
911401569143	BY570P LED100/NW PSD HRO PP	-30 to +45 °C
911401569243	BY570P LED100/CW PSD WB PP	-30 to +45 °C
911401569343	BY570P LED100/CW PSD NB PP	-30 to +45 °C
911401569443	BY570P LED100/CW PSD HRO PP	-30 to +45 °C
911401569543	BY570P LED150/NW PSD WB PP	-30 to +45 °C
911401569643	BY570P LED150/NW PSD NB PP	-30 to +45 °C
911401569743	BY570P LED150/NW PSD HRO PP	-30 to +45 °C
911401569843	BY570P LED150/CW PSD WB PP	-30 to +45 °C
911401569943	BY570P LED150/CW PSD NB PP	-30 to +45 °C
911401570043	BY570P LED150/CW PSD HRO PP	-30 to +45 °C
911401573743	BY570P LED100/NW PSU WB SP	-30 to +50 °C
911401573843	BY570P LED100/NW PSU NB SP	-30 to +50 °C
911401573943	BY570P LED100/NW PSU HRO SP	-30 to +50 °C
911401574043	BY570P LED100/CW PSU WB SP	-30 to +50 °C
911401574143	BY570P LED100/CW PSU NB SP	-30 to +50 °C
911401574243	BY570P LED100/CW PSU HRO SP	-30 to +50 °C
911401574343	BY570P LED150/NW PSU WB SP	-30 to +50 °C
911401574443	BY570P LED150/NW PSU NB SP	-30 to +50 °C
911401574543	BY570P LED150/NW PSU HRO SP	-30 to +50 °C
911401574643	BY570P LED150/CW PSU WB SP	-30 to +50 °C
911401574743	BY570P LED150/CW PSU NB SP	-30 to +50 °C
911401574843	BY570P LED150/CW PSU HRO SP	-30 to +50 °C
911401576143	BY570P LED100/NW PSD WB SP	-30 to +45 °C
911401576243	BY570P LED100/NW PSD NB SP	-30 to +45 °C
911401576343	BY570P LED100/NW PSD HRO SP	-30 to +45 °C
911401576443	BY570P LED100/CW PSD WB SP	-30 to +45 °C
911401576543	BY570P LED100/CW PSD NB SP	-30 to +45 °C
911401576643	BY570P LED100/CW PSD HRO SP	-30 to +45 °C
911401576743	BY570P LED150/NW PSD WB SP	-30 to +45 °C
911401576843	BY570P LED150/NW PSD NB SP	-30 to +45 °C
911401576943	BY570P LED150/NW PSD HRO SP	-30 to +45 °C
911401577043	BY570P LED150/CW PSD WB SP	-30 to +45 °C
911401577143	BY570P LED150/CW PSD NB SP	-30 to +45 °C
911401577243	BY570P LED150/CW PSD HRO SP	-30 to +45 °C
911401580943	BY570P LED100/840 PSU WB CAU	-30 to +50 °C
911401581043	BY570P LED100/840 PSU NB CAU	-30 to +50 °C
911401581143	BY570P LED100/840 PSU HRO CAU	-30 to +50 °C

Order Code	Full Product Name	Ambient temperature range
911401581243	BY570P LED150/840 PSU WB CAU	-30 to +50 °C
911401581343	BY570P LED150/840 PSU NB CAU	-30 to +50 °C
911401581443	BY570P LED150/840 PSU HRO CAU	-30 to +50 °C
911401582143	BY570P LED100/840 PSD WB CAU	-30 to +45 °C
911401582243	BY570P LED100/840 PSD NB CAU	-30 to +45 °C
911401582343	BY570P LED100/840 PSD HRO CAU	-30 to +45 °C
911401582443	BY570P LED150/840 PSD WB CAU	-30 to +45 °C
911401582543	BY570P LED150/840 PSD NB CAU	-30 to +45 °C
911401582643	BY570P LED150/840 PSD HRO CAU	-30 to +45 °C
911401584943	BY570P LED100/850 PSU WB JP	-30 to +50 °C
911401585043	BY570P LED150/850 PSU WB JP	-30 to +50 °C
911401568343	BY570P LED250/NW PSU WB PP	-30 to +50 °C
911401568443	BY570P LED250/NW PSU NB PP	-30 to +50 °C
911401568543	BY570P LED250/NW PSU HRO PP	-30 to +50 °C
911401568643	BY570P LED250/CW PSU WB PP	-30 to +50 °C
911401568743	BY570P LED250/CW PSU NB PP	-30 to +50 °C
911401568843	BY570P LED250/CW PSU HRO PP	-30 to +50 °C
911401570743	BY570P LED250/NW PSD WB PP	-30 to +45 °C
911401570843	BY570P LED250/NW PSD NB PP	-30 to +45 °C
911401570943	BY570P LED250/NW PSD HRO PP	-30 to +45 °C
911401571043	BY570P LED250/CW PSD WB PP	-30 to +45 °C
911401571143	BY570P LED250/CW PSD NB PP	-30 to +45 °C
911401571243	BY570P LED250/CW PSD HRO PP	-30 to +45 °C
911401575543	BY570P LED250/NW PSU WB SP	-30 to +50 °C
911401575643	BY570P LED250/NW PSU NB SP	-30 to +50 °C
911401575743	BY570P LED250/NW PSU HRO SP	-30 to +50 °C
911401575843	BY570P LED250/CW PSU WB SP	-30 to +50 °C
911401575943	BY570P LED250/CW PSU NB SP	-30 to +50 °C
911401576043	BY570P LED250/CW PSU HRO SP	-30 to +50 °C
911401577943	BY570P LED250/NW PSD WB SP	-30 to +45 °C
911401578043	BY570P LED250/NW PSD NB SP	-30 to +45 °C
911401578143	BY570P LED250/NW PSD HRO SP	-30 to +45 °C
911401578243	BY570P LED250/CW PSD WB SP	-30 to +45 °C
911401578343	BY570P LED250/CW PSD NB SP	-30 to +45 °C
911401578443	BY570P LED250/CW PSD HRO SP	-30 to +45 °C
911401581843	BY570P LED250/840 PSU WB CAU	-30 to +50 °C
911401581943	BY570P LED250/840 PSU NB CAU	-30 to +50 °C
911401582043	BY570P LED250/840 PSU HRO CAU	-30 to +50 °C
911401583043	BY570P LED250/840 PSD WB CAU	-30 to +45 °C
911401583143	BY570P LED250/840 PSD NB CAU	-30 to +45 °C
911401583243	BY570P LED250/840 PSD HRO CAU	-30 to +45 °C
911401584743	BY570P LED250/840 PSU WB CAU CL	-30 to +50 °C

Order Code	Full Product Name	Ambient temperature range
911401584843	BY570P LED250/865 PSU WB CAU CL	-30 to +50 °C
911401585243	BY570P LED250/850 PSU WB JP	-30 to +50 °C
911401571343	BY570X LED100/NW SIA WB PP	-30 to +45 °C
911401571443	BY570X LED100/NW SIA NB PP	-30 to +45 °C
911401571543	BY570X LED100/NW SIA HRO PP	-30 to +45 °C
911401571643	BY570X LED100/CW SIA WB PP	-30 to +45 °C
911401571743	BY570X LED100/CW SIA NB PP	-30 to +45 °C
911401571843	BY570X LED100/CW SIA HRO PP	-30 to +45 °C
911401571943	BY570X LED150/NW SIA WB PP	-30 to +45 °C
911401572043	BY570X LED150/NW SIA NB PP	-30 to +45 °C
911401572143	BY570X LED150/NW SIA HRO PP	-30 to +45 °C
911401572243	BY570X LED150/CW SIA WB PP	-30 to +45 °C
911401572343	BY570X LED150/CW SIA NB PP	-30 to +45 °C
911401572443	BY570X LED150/CW SIA HRO PP	-30 to +45 °C
911401572543	BY570X LED200/NW SIA WB PP	-30 to +45 °C
911401572643	BY570X LED200/NW SIA NB PP	-30 to +45 °C
911401572743	BY570X LED200/NW SIA HRO PP	-30 to +45 °C
911401572843	BY570X LED200/CW SIA WB PP	-30 to +45 °C
911401572943	BY570X LED200/CW SIA NB PP	-30 to +45 °C
911401573043	BY570X LED200/CW SIA HRO PP	-30 to +45 °C
911401573143	BY570X LED250/NW SIA WB PP	-30 to +45 °C
911401573243	BY570X LED250/NW SIA NB PP	-30 to +45 °C
911401573343	BY570X LED250/NW SIA HRO PP	-30 to +45 °C
911401573443	BY570X LED250/CW SIA WB PP	-30 to +45 °C
911401573543	BY570X LED250/CW SIA NB PP	-30 to +45 °C
911401573643	BY570X LED250/CW SIA HRO PP	-30 to +45 °C
911401578543	BY570X LED100/NW SIA WB SP	-30 to +45 °C
911401578643	BY570X LED100/NW SIA NB SP	-30 to +45 °C
911401578743	BY570X LED100/NW SIA HRO SP	-30 to +45 °C
911401578843	BY570X LED100/CW SIA WB SP	-30 to +45 °C
911401578943	BY570X LED100/CW SIA NB SP	-30 to +45 °C
911401579043	BY570X LED100/CW SIA HRO SP	-30 to +45 °C
911401579143	BY570X LED150/NW SIA WB SP	-30 to +45 °C
911401579243	BY570X LED150/NW SIA NB SP	-30 to +45 °C
911401579343	BY570X LED150/NW SIA HRO SP	-30 to +45 °C
911401579443	BY570X LED150/CW SIA WB SP	-30 to +45 °C
911401579543	BY570X LED150/CW SIA NB SP	-30 to +45 °C
911401579643	BY570X LED150/CW SIA HRO SP	-30 to +45 °C
911401579743	BY570X LED200/NW SIA WB SP	-30 to +45 °C
911401579843	BY570X LED200/NW SIA NB SP	-30 to +45 °C
911401579943	BY570X LED200/NW SIA HRO SP	-30 to +45 °C
911401580043	BY570X LED200/CW SIA WB SP	-30 to +45 °C

Order Code	Full Product Name	Ambient temperature range
911401580143	BY570X LED200/CW SIA NB SP	-30 to +45 °C
911401580243	BY570X LED200/CW SIA HRO SP	-30 to +45 °C
911401580343	BY570X LED250/NW SIA WB SP	-30 to +45 °C
911401580443	BY570X LED250/NW SIA NB SP	-30 to +45 °C
911401580543	BY570X LED250/NW SIA HRO SP	-30 to +45 °C
911401580643	BY570X LED250/CW SIA WB SP	-30 to +45 °C
911401580743	BY570X LED250/CW SIA NB SP	-30 to +45 °C
911401580843	BY570X LED250/CW SIA HRO SP	-30 to +45 °C
911401583343	BY570X LED100/840 SIA WB CAU	-30 to +45 °C
911401583443	BY570X LED100/840 SIA NB CAU	-30 to +45 °C
911401583543	BY570X LED100/840 SIA HRO CAU	-30 to +45 °C
911401583643	BY570X LED150/840 SIA WB CAU	-30 to +45 °C
911401583743	BY570X LED150/840 SIA NB CAU	-30 to +45 °C
911401583843	BY570X LED150/840 SIA HRO CAU	-30 to +45 °C
911401583943	BY570X LED200/840 SIA WB CAU	-30 to +45 °C
911401584043	BY570X LED200/840 SIA NB CAU	-30 to +45 °C
911401584143	BY570X LED200/840 SIA HRO CAU	-30 to +45 °C
911401584243	BY570X LED250/840 SIA WB CAU	-30 to +45 °C
911401584343	BY570X LED250/840 SIA NB CAU	-30 to +45 °C
911401584443	BY570X LED250/840 SIA HRO CAU	-30 to +45 °C
911401567743	BY570P LED200/NW PSU WB PP	-30 to +50 °C
911401567843	BY570P LED200/NW PSU NB PP	-30 to +50 °C
911401567943	BY570P LED200/NW PSU HRO PP	-30 to +50 °C
911401568043	BY570P LED200/CW PSU WB PP	-30 to +50 °C
911401568143	BY570P LED200/CW PSU NB PP	-30 to +50 °C
911401568243	BY570P LED200/CW PSU HRO PP	-30 to +50 °C
911401570143	BY570P LED200/NW PSD WB PP	-30 to +45 °C
911401570243	BY570P LED200/NW PSD NB PP	-30 to +45 °C
911401570343	BY570P LED200/NW PSD HRO PP	-30 to +45 °C
911401570443	BY570P LED200/CW PSD WB PP	-30 to +45 °C
911401570543	BY570P LED200/CW PSD NB PP	-30 to +45 °C
911401570643	BY570P LED200/CW PSD HRO PP	-30 to +45 °C
911401574943	BY570P LED200/NW PSU WB SP	-30 to +50 °C
911401575043	BY570P LED200/NW PSU NB SP	-30 to +50 °C
911401575143	BY570P LED200/NW PSU HRO SP	-30 to +50 °C
911401575243	BY570P LED200/CW PSU WB SP	-30 to +50 °C
911401575343	BY570P LED200/CW PSU NB SP	-30 to +50 °C
911401575443	BY570P LED200/CW PSU HRO SP	-30 to +50 °C
911401577343	BY570P LED200/NW PSD WB SP	-30 to +45 °C
911401577443	BY570P LED200/NW PSD NB SP	-30 to +45 °C
911401577543	BY570P LED200/NW PSD HRO SP	-30 to +45 °C
911401577643	BY570P LED200/CW PSD WB SP	-30 to +45 °C

Order Code	Full Product Name	Ambient temperature range
911401577743	BY570P LED200/CW PSD NB SP	-30 to +45 °C
911401577843	BY570P LED200/CW PSD HRO SP	-30 to +45 °C
911401581543	BY570P LED200/840 PSU WB CAU	-30 to +50 °C
911401581643	BY570P LED200/840 PSU NB CAU	-30 to +50 °C
911401581743	BY570P LED200/840 PSU HRO CAU	-30 to +50 °C
911401582743	BY570P LED200/840 PSD WB CAU	-30 to +45 °C
911401582843	BY570P LED200/840 PSD NB CAU	-30 to +45 °C
911401582943	BY570P LED200/840 PSD HRO CAU	-30 to +45 °C
911401584543	BY570P LED200/840 PSU WB CAU CL	-30 to +50 °C
911401584643	BY570P LED200/865 PSU WB CAU CL	-30 to +50 °C
911401585143	BY570P LED200/850 PSU WB JP	-30 to +50 °C

Initial Performance (IEC Compliant)

Order Code	Full Product Name	Initial chromaticity
911401566543	BY570P LED100/NW PSU WB PP	(0.380,0.379)
911401566643	BY570P LED100/NW PSU NB PP	(0.380,0.379)
911401566743	BY570P LED100/NW PSU HRO PP	(0.380,0.379)
911401566843	BY570P LED100/CW PSU WB PP	(0.313,0.324)
911401566943	BY570P LED100/CW PSU NB PP	(0.313,0.324)
911401567043	BY570P LED100/CW PSU HRO PP	(0.313,0.324)
911401567143	BY570P LED150/NW PSU WB PP	(0.380,0.379)
911401567243	BY570P LED150/NW PSU NB PP	(0.380,0.379)
911401567343	BY570P LED150/NW PSU HRO PP	(0.380,0.379)
911401567443	BY570P LED150/CW PSU WB PP	(0.313,0.324)
911401567543	BY570P LED150/CW PSU NB PP	(0.313,0.324)
911401567643	BY570P LED150/CW PSU HRO PP	(0.313,0.324)
911401568943	BY570P LED100/NW PSD WB PP	(0.380,0.379)
911401569043	BY570P LED100/NW PSD NB PP	(0.380,0.379)
911401569143	BY570P LED100/NW PSD HRO PP	(0.380,0.379)
911401569243	BY570P LED100/CW PSD WB PP	(0.313,0.324)
911401569343	BY570P LED100/CW PSD NB PP	(0.313,0.324)
911401569443	BY570P LED100/CW PSD HRO PP	(0.313,0.324)
911401569543	BY570P LED150/NW PSD WB PP	(0.380,0.379)
911401569643	BY570P LED150/NW PSD NB PP	(0.380,0.379)
911401569743	BY570P LED150/NW PSD HRO PP	(0.380,0.379)
911401569843	BY570P LED150/CW PSD WB PP	(0.313,0.324)
911401569943	BY570P LED150/CW PSD NB PP	(0.313,0.324)
911401570043	BY570P LED150/CW PSD HRO PP	(0.313,0.324)
911401573743	BY570P LED100/NW PSU WB SP	(0.380,0.379)
911401573843	BY570P LED100/NW PSU NB SP	(0.380,0.379)
911401573943	BY570P LED100/NW PSU HRO SP	(0.380,0.379)

Order Code	Full Product Name	Initial chromaticity
911401574043	BY570P LED100/CW PSU WB SP	(0.313,0.324)
911401574143	BY570P LED100/CW PSU NB SP	(0.313,0.324)
911401574243	BY570P LED100/CW PSU HRO SP	(0.313,0.324)
911401574343	BY570P LED150/NW PSU WB SP	(0.380,0.379)
911401574443	BY570P LED150/NW PSU NB SP	(0.380,0.379)
911401574543	BY570P LED150/NW PSU HRO SP	(0.380,0.379)
911401574643	BY570P LED150/CW PSU WB SP	(0.313,0.324)
911401574743	BY570P LED150/CW PSU NB SP	(0.313,0.324)
911401574843	BY570P LED150/CW PSU HRO SP	(0.313,0.324)
911401576143	BY570P LED100/NW PSD WB SP	(0.380,0.379)
911401576243	BY570P LED100/NW PSD NB SP	(0.380,0.379)
911401576343	BY570P LED100/NW PSD HRO SP	(0.380,0.379)
911401576443	BY570P LED100/CW PSD WB SP	(0.313,0.324)
911401576543	BY570P LED100/CW PSD NB SP	(0.313,0.324)
911401576643	BY570P LED100/CW PSD HRO SP	(0.313,0.324)
911401576743	BY570P LED150/NW PSD WB SP	(0.380,0.379)
911401576843	BY570P LED150/NW PSD NB SP	(0.380,0.379)
911401576943	BY570P LED150/NW PSD HRO SP	(0.380,0.379)
911401577043	BY570P LED150/CW PSD WB SP	(0.313,0.324)
911401577143	BY570P LED150/CW PSD NB SP	(0.313,0.324)
911401577243	BY570P LED150/CW PSD HRO SP	(0.313,0.324)
911401580943	BY570P LED100/840 PSU WB CAU	(0.380,0.379)
911401581043	BY570P LED100/840 PSU NB CAU	(0.380,0.379)
911401581143	BY570P LED100/840 PSU HRO CAU	(0.380,0.379)
911401581243	BY570P LED150/840 PSU WB CAU	(0.380,0.379)
911401581343	BY570P LED150/840 PSU NB CAU	(0.380,0.379)
911401581443	BY570P LED150/840 PSU HRO CAU	(0.380,0.379)
911401582143	BY570P LED100/840 PSD WB CAU	(0.380,0.379)
911401582243	BY570P LED100/840 PSD NB CAU	(0.380,0.379)
911401582343	BY570P LED100/840 PSD HRO CAU	(0.380,0.379)
911401582443	BY570P LED150/840 PSD WB CAU	(0.380,0.379)
911401582543	BY570P LED150/840 PSD NB CAU	(0.380,0.379)
911401582643	BY570P LED150/840 PSD HRO CAU	(0.380,0.379)
911401584943	BY570P LED100/850 PSU WB JP	(0.346,0.358)
911401585043	BY570P LED150/850 PSU WB JP	(0.346,0.358)
911401568343	BY570P LED250/NW PSU WB PP	(0.380,0.379)
911401568443	BY570P LED250/NW PSU NB PP	(0.380,0.379)
911401568543	BY570P LED250/NW PSU HRO PP	(0.380,0.379)
911401568643	BY570P LED250/CW PSU WB PP	(0.313,0.324)
911401568743	BY570P LED250/CW PSU NB PP	(0.313,0.324)
911401568843	BY570P LED250/CW PSU HRO PP	(0.313,0.324)
911401570743	BY570P LED250/NW PSD WB PP	(0.380,0.379)

Order Code	Full Product Name	Initial chromaticity
911401570843	BY570P LED250/NW PSD NB PP	(0.380,0.379)
911401570943	BY570P LED250/NW PSD HRO PP	(0.380,0.379)
911401571043	BY570P LED250/CW PSD WB PP	(0.313,0.324)
911401571143	BY570P LED250/CW PSD NB PP	(0.313,0.324)
911401571243	BY570P LED250/CW PSD HRO PP	(0.313,0.324)
911401575543	BY570P LED250/NW PSU WB SP	(0.380,0.379)
911401575643	BY570P LED250/NW PSU NB SP	(0.380,0.379)
911401575743	BY570P LED250/NW PSU HRO SP	(0.380,0.379)
911401575843	BY570P LED250/CW PSU WB SP	(0.313,0.324)
911401575943	BY570P LED250/CW PSU NB SP	(0.313,0.324)
911401576043	BY570P LED250/CW PSU HRO SP	(0.313,0.324)
911401577943	BY570P LED250/NW PSD WB SP	(0.380,0.379)
911401578043	BY570P LED250/NW PSD NB SP	(0.380,0.379)
911401578143	BY570P LED250/NW PSD HRO SP	(0.380,0.379)
911401578243	BY570P LED250/CW PSD WB SP	(0.313,0.324)
911401578343	BY570P LED250/CW PSD NB SP	(0.313,0.324)
911401578443	BY570P LED250/CW PSD HRO SP	(0.313,0.324)
911401581843	BY570P LED250/840 PSU WB CAU	(0.380,0.379)
911401581943	BY570P LED250/840 PSU NB CAU	(0.380,0.379)
911401582043	BY570P LED250/840 PSU HRO CAU	(0.380,0.379)
911401583043	BY570P LED250/840 PSD WB CAU	(0.380,0.379)
911401583143	BY570P LED250/840 PSD NB CAU	(0.380,0.379)
911401583243	BY570P LED250/840 PSD HRO CAU	(0.380,0.379)
911401584743	BY570P LED250/840 PSU WB CAU CL	(0.380,0.379)
911401584843	BY570P LED250/865 PSU WB CAU CL	(0.313,0.324)
911401585243	BY570P LED250/850 PSU WB JP	(0.346,0.358)
911401571343	BY570X LED100/NW SIA WB PP	(0.380,0.379)
911401571443	BY570X LED100/NW SIA NB PP	(0.380,0.379)
911401571543	BY570X LED100/NW SIA HRO PP	(0.380,0.379)
911401571643	BY570X LED100/CW SIA WB PP	(0.313,0.324)
911401571743	BY570X LED100/CW SIA NB PP	(0.313,0.324)
911401571843	BY570X LED100/CW SIA HRO PP	(0.313,0.324)
911401571943	BY570X LED150/NW SIA WB PP	(0.380,0.379)
911401572043	BY570X LED150/NW SIA NB PP	(0.380,0.379)
911401572143	BY570X LED150/NW SIA HRO PP	(0.380,0.379)
911401572243	BY570X LED150/CW SIA WB PP	(0.313,0.324)
911401572343	BY570X LED150/CW SIA NB PP	(0.313,0.324)
911401572443	BY570X LED150/CW SIA HRO PP	(0.313,0.324)
911401572543	BY570X LED200/NW SIA WB PP	(0.380,0.379)
911401572643	BY570X LED200/NW SIA NB PP	(0.380,0.379)
911401572743	BY570X LED200/NW SIA HRO PP	(0.380,0.379)
911401572843	BY570X LED200/CW SIA WB PP	(0.313,0.324)

Order Code	Full Product Name	Initial chromaticity
911401572943	BY570X LED200/CW SIA NB PP	(0.313,0.324)
911401573043	BY570X LED200/CW SIA HRO PP	(0.313,0.324)
911401573143	BY570X LED250/NW SIA WB PP	(0.380,0.379)
911401573243	BY570X LED250/NW SIA NB PP	(0.380,0.379)
911401573343	BY570X LED250/NW SIA HRO PP	(0.380,0.379)
911401573443	BY570X LED250/CW SIA WB PP	(0.313,0.324)
911401573543	BY570X LED250/CW SIA NB PP	(0.313,0.324)
911401573643	BY570X LED250/CW SIA HRO PP	(0.313,0.324)
911401578543	BY570X LED100/NW SIA WB SP	(0.380,0.379)
911401578643	BY570X LED100/NW SIA NB SP	(0.380,0.379)
911401578743	BY570X LED100/NW SIA HRO SP	(0.380,0.379)
911401578843	BY570X LED100/CW SIA WB SP	(0.313,0.324)
911401578943	BY570X LED100/CW SIA NB SP	(0.313,0.324)
911401579043	BY570X LED100/CW SIA HRO SP	(0.313,0.324)
911401579143	BY570X LED150/NW SIA WB SP	(0.380,0.379)
911401579243	BY570X LED150/NW SIA NB SP	(0.380,0.379)
911401579343	BY570X LED150/NW SIA HRO SP	(0.380,0.379)
911401579443	BY570X LED150/CW SIA WB SP	(0.313,0.324)
911401579543	BY570X LED150/CW SIA NB SP	(0.313,0.324)
911401579643	BY570X LED150/CW SIA HRO SP	(0.313,0.324)
911401579743	BY570X LED200/NW SIA WB SP	(0.380,0.379)
911401579843	BY570X LED200/NW SIA NB SP	(0.380,0.379)
911401579943	BY570X LED200/NW SIA HRO SP	(0.380,0.379)
911401580043	BY570X LED200/CW SIA WB SP	(0.313,0.324)
911401580143	BY570X LED200/CW SIA NB SP	(0.313,0.324)
911401580243	BY570X LED200/CW SIA HRO SP	(0.313,0.324)
911401580343	BY570X LED250/NW SIA WB SP	(0.380,0.379)
911401580443	BY570X LED250/NW SIA NB SP	(0.380,0.379)
911401580543	BY570X LED250/NW SIA HRO SP	(0.380,0.379)
911401580643	BY570X LED250/CW SIA WB SP	(0.313,0.324)
911401580743	BY570X LED250/CW SIA NB SP	(0.313,0.324)
911401580843	BY570X LED250/CW SIA HRO SP	(0.313,0.324)
911401583343	BY570X LED100/840 SIA WB CAU	(0.380,0.379)
911401583443	BY570X LED100/840 SIA NB CAU	(0.380,0.379)
911401583543	BY570X LED100/840 SIA HRO CAU	(0.380,0.379)
911401583643	BY570X LED150/840 SIA WB CAU	(0.380,0.379)
911401583743	BY570X LED150/840 SIA NB CAU	(0.380,0.379)
911401583843	BY570X LED150/840 SIA HRO CAU	(0.380,0.379)
911401583943	BY570X LED200/840 SIA WB CAU	(0.380,0.379)
911401584043	BY570X LED200/840 SIA NB CAU	(0.380,0.379)
911401584143	BY570X LED200/840 SIA HRO CAU	(0.380,0.379)
911401584243	BY570X LED250/840 SIA WB CAU	(0.380,0.379)

Order Code	Full Product Name	Initial chromaticity
911401584343	BY570X LED250/840 SIA NB CAU	(0.380,0.379)
911401584443	BY570X LED250/840 SIA HRO CAU	(0.380,0.379)
911401567743	BY570P LED200/NW PSU WB PP	(0.380,0.379)
911401567843	BY570P LED200/NW PSU NB PP	(0.380,0.379)
911401567943	BY570P LED200/NW PSU HRO PP	(0.380,0.379)
911401568043	BY570P LED200/CW PSU WB PP	(0.313,0.324)
911401568143	BY570P LED200/CW PSU NB PP	(0.313,0.324)
911401568243	BY570P LED200/CW PSU HRO PP	(0.313,0.324)
911401570143	BY570P LED200/NW PSD WB PP	(0.380,0.379)
911401570243	BY570P LED200/NW PSD NB PP	(0.380,0.379)
911401570343	BY570P LED200/NW PSD HRO PP	(0.380,0.379)
911401570443	BY570P LED200/CW PSD WB PP	(0.313,0.324)
911401570543	BY570P LED200/CW PSD NB PP	(0.313,0.324)
911401570643	BY570P LED200/CW PSD HRO PP	(0.313,0.324)
911401574943	BY570P LED200/NW PSU WB SP	(0.380,0.379)
911401575043	BY570P LED200/NW PSU NB SP	(0.380,0.379)
911401575143	BY570P LED200/NW PSU HRO SP	(0.380,0.379)
911401575243	BY570P LED200/CW PSU WB SP	(0.313,0.324)
911401575343	BY570P LED200/CW PSU NB SP	(0.313,0.324)
911401575443	BY570P LED200/CW PSU HRO SP	(0.313,0.324)
911401577343	BY570P LED200/NW PSD WB SP	(0.380,0.379)
911401577443	BY570P LED200/NW PSD NB SP	(0.380,0.379)
911401577543	BY570P LED200/NW PSD HRO SP	(0.380,0.379)
911401577643	BY570P LED200/CW PSD WB SP	(0.313,0.324)
911401577743	BY570P LED200/CW PSD NB SP	(0.313,0.324)
911401577843	BY570P LED200/CW PSD HRO SP	(0.313,0.324)
911401581543	BY570P LED200/840 PSU WB CAU	(0.380,0.379)
911401581643	BY570P LED200/840 PSU NB CAU	(0.380,0.379)
911401581743	BY570P LED200/840 PSU HRO CAU	(0.380,0.379)
911401582743	BY570P LED200/840 PSD WB CAU	(0.380,0.379)
911401582843	BY570P LED200/840 PSD NB CAU	(0.380,0.379)
911401582943	BY570P LED200/840 PSD HRO CAU	(0.380,0.379)
911401584543	BY570P LED200/840 PSU WB CAU CL	(0.380,0.379)
911401584643	BY570P LED200/865 PSU WB CAU CL	(0.313,0.324)
911401585143	BY570P LED200/850 PSU WB JP	(0.346,0.358)

© 2026 Signify Holding. All rights reserved. The information provided herein is subject to change, without notice. Signify does not give any representation or warranty as to the accuracy or completeness of the information included herein and shall not be liable for any action in reliance thereon. The information presented in this document is not intended as any commercial offer and does not form part of any quotation or contract, unless otherwise agreed by Signify. Philips and the Philips Shield Emblem are registered trademarks of Koninklijke Philips N.V.