PHILIPS

Ledinaire surface-mounted

SM060C



Proven quality. Effortless installation. Every time. Your dependable and affordable choice for every job

The Philips Ledinaire surface-mounted (SM060C) is a range of popular off-the-shelf LED luminaires that come with Philips high quality levels at a competitive price. Reliable, energy efficient and affordable, Ledinaire surface-mounted luminaires are designed for diffuse, comfortable lighting in a wide range of general lighting applications – just what you need.

Benefits

- Philips quality and reliability
- Energy saving
- Diffuse, comfortable light

Applications

- Offices
- Healthcare
- Education

Features

- Recessed and surface-mounted versions
- Modern, unobtrusive design
- Easy connector for faster installation
- Energy efficient up to 100 lm/W
- Long lifetime of 50,000 hours @L70
- Office compliant (OC) and non-office compliant (NOC) versions available

Versions



Ledinaire surface mounted
G2 W20L120 OC



Ledinaire surface mounted
G2 W20L120 NOC

Dimensional drawing

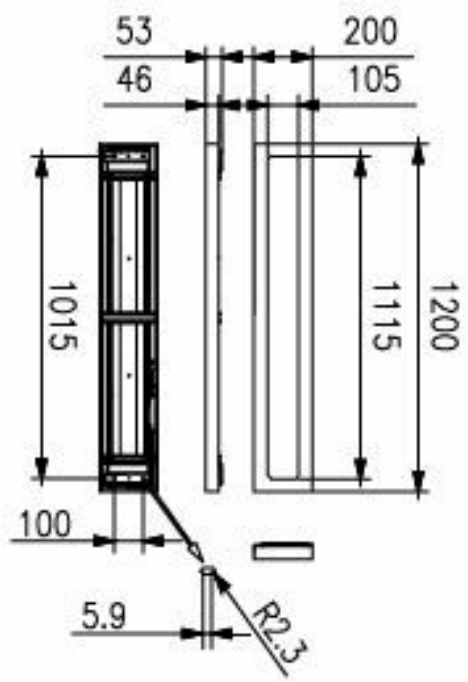

SM060C G2 34_40S/840 PSU W20L120 OC

Product details

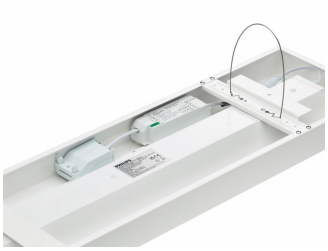

Ledinaire surface mounted
G2 PSU back side



Ledinaire surface mounted
G2 OC Optical window



Ledinaire surface mounted G2 PSU All in lumen selectable side



Ledinaire surface mounted G2 NOC Optical window

General Information

Number of gear units	1 unit
Driver included	Yes
Service tag	No

Light Technical

Correlated Color Temperature (Nom)	4000 K
Luminous Efficacy (rated) (Nom)	120 lm/W
Color rendering index (CRI)	>80
All-in Type	All-in, Multi Lumen

Operating and Electrical

Input Voltage	220 to 240 V
Line Frequency	50 or 60 Hz
Suitable for random switching	Yes
Protection class IEC	Safety class II

Controls and Dimming

Dimmable	No

Mechanical and Housing

Housing Color	White
Ingress protection code	IP20 [Finger-protected]
Mech. impact protection code	IK03 [0.3 J]

Approval and Application

Glow-wire test	Temperature 650 °C, duration 30 s
Flammability mark	For mounting on normally flammable surfaces
CE mark	Yes
ENEC mark	-
Stroboscopic effect visibility measure (SVM)	1.6
Ambient temperature range	-10 to +40 °C

Initial Performance (IEC Compliant)

Luminous flux tolerance	+/-10%
Initial chromaticity	(0.38,0.38)SDCM<5

Light Technical

Order Code	Full Product Name	Luminous Flux	Optic type
911401843887	SM060C G2 34_40S/840 PSU W20L120 OC	3,400 lm 4,000 lm	Beam angle 84°
911401843787	SM060C G2 34_40S/840 PSU W20L120 NOC	3,400 lm 4,000 lm	Wide beam

Operating and Electrical

Order Code	Full Product Name	Power Consumption
911401843887	SM060C G2 34_40S/840 PSU W20L120 OC	33 W 28 W
911401843787	SM060C G2 34_40S/840 PSU W20L120 NOC	33 W 28 W

© 2026 Signify Holding. All rights reserved. The information provided herein is subject to change, without notice. Signify does not give any representation or warranty as to the accuracy or completeness of the information included herein and shall not be liable for any action in reliance thereon. The information presented in this document is not intended as any commercial offer and does not form part of any quotation or contract, unless otherwise agreed by Signify. Philips and the Philips Shield Emblem are registered trademarks of Koninklijke Philips N.V.