PHILIPS

EB-E Electronic ballasts for TL-D lamps (India)

IN_TL5DE



EB-E electronic ballasts for TL-D lamps

Compact, lightweight, high-frequency electronic ballast for TL-D lamps

Benefits

- More than 25% reduction in energy consumption compared with conventional gear at equal luminous flux
- Suitable for modern low-height battens thanks to slim construction and 21 mm height

Features

- Flicker-free instant start
- High power factor
- Minimum ignition voltage of 90 V

Applications

- Home
- Retail
- Areas with low-voltage problems

Versions



GPPR INEFLU01 0001



GPPR_INEFLU01_0015-Product photo

Dimensional drawing

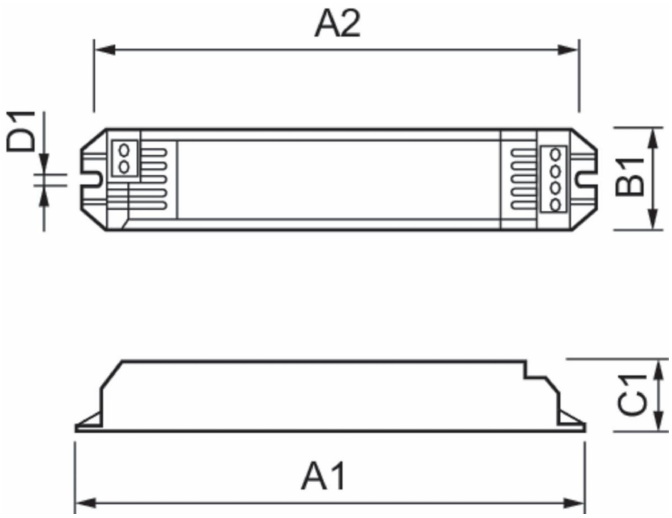

Product	D1	C1	A1	A2	B1
EBE (Slim) 136 TLD 240V	4.0 mm	21.0 mm	265.0 mm	253.3 mm	30.0 mm

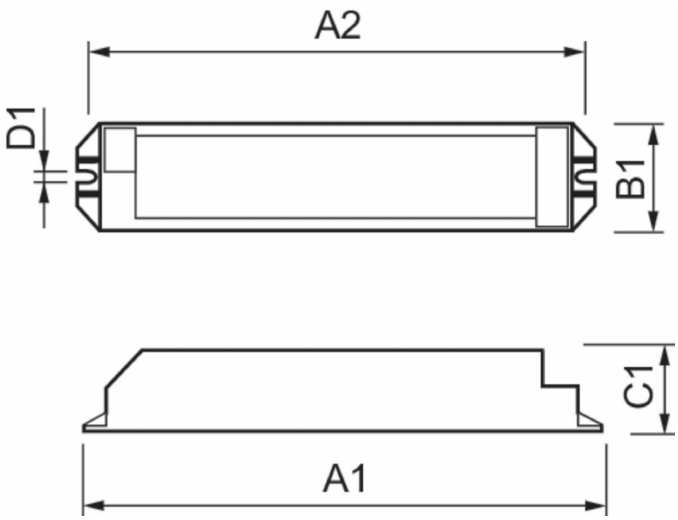

Product	D1	C1	A1	A2	B1
EBE 236 TLD 240	4.0 mm	30.0 mm	211.0 mm	200.0 mm	40.0 mm

Operating and Electrical

Line Frequency	50 to 60 Hz
Input Frequency	50 to 60 Hz

Approval and Application

Energy Efficiency Index	Not specified

Operating and Electrical

Order Code	Full Product Name	Input Voltage
913702242112	EBE 236 TLD 240	220 to 240 V
913702242021	EBE (Slim) 136 TLD 240V	240 V

© 2026 Signify Holding. All rights reserved. The information provided herein is subject to change, without notice. Signify does not give any representation or warranty as to the accuracy or completeness of the information included herein and shall not be liable for any action in reliance thereon. The information presented in this document is not intended as any commercial offer and does not form part of any quotation or contract, unless otherwise agreed by Signify. Philips and the Philips Shield Emblem are registered trademarks of Koninklijke Philips N.V.