PHILIPS

BN310P LED200/865 PSD-VLC MB EL L1700 WH

919406021751



SlimPerform Batten, 129 W, 20000 lm, 6500 K, DALI

Lighting plays a different role in every application. Some require latest-generation solutions with high light quality and connectivity; others just simple functionality. But whether for retail or industrial applications, you always need a combination of quality, performance, and flexibility. Get to know SlimPerform. The Batten LED luminaire where all these benefits come together. Putting the new lighting trend in your company.

Warnings and Safety

- 5-year warranty

General Information

Light source replaceable	No
Driver included	Yes
Value ladder	Performance

Light Technical

Luminous Flux	20,000 lm
Correlated Color Temperature (Nom)	6500 K
Luminous Efficacy (rated) (Nom)	155.04 lm/W
Color rendering index (CRI)	>80

Operating and Electrical

Input Voltage	220 to 240 V
Line Frequency	50 or 60 Hz
Inrush current	4.5 A
Inrush time	1 ms
Power Consumption	129 W
Power Factor (Fraction)	0.92
Connection	Connection unit 3-pole
Cable	Cable 0.25 m with connector 3-pole
Protection class IEC	Safety class I

Controls and Dimming

Dimmable	Yes
Driver/power unit/transformer	Power supply unit with DALI interface
Control interface	DALI
Constant light output	No
Maximum dim level	1%

Mechanical and Housing

Housing Material	Aluminium
Housing Color	White
Mounting device	Mounting bracket
Overall length	1,691 mm
Overall width	59 mm
Overall height	82 mm
Dimensions (Height x Width x Depth)	82 x 59 x 1691 mm
Ingress protection code	IP23 [Finger-protected, rain/spray-proof]
Net Weight (Piece)	2.700 kg

Approval and Application

Ambient temperature range	-20 to +45 °C

Initial Performance (IEC Compliant)

Luminous flux tolerance	+/-10%
Power consumption tolerance	+/-10%

Over Time Performance (IEC Compliant)

Median useful life L70B50	60,000 hour(s)

Product Data

Order product name	BN310P LED200/865 PSD-VLC MB EL L1700 WH
Full product name	BN310P LED200/865 PSD-VLC MB EL L1700 WH
Order code	919406021751
Material Nr. (12NC)	919406021751
Numerator - Quantity Per Pack	1
EAN/UPC - Product/Case	7894400003166
Numerator - Packs per outer box	5
EAN/UPC - Case	17894400003163

Dimensional drawing

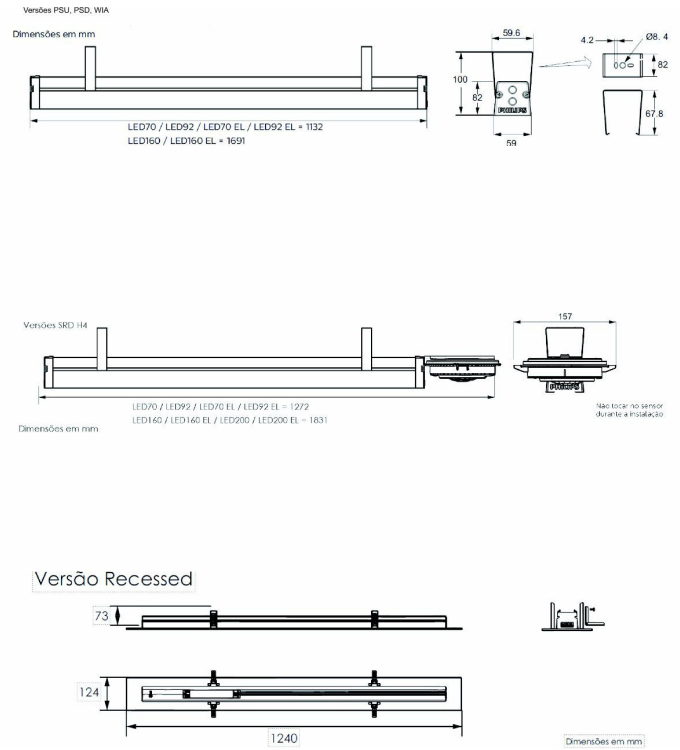

Related Documents

Photometry and lighting design	Document Name	Download
IES File	BN310P LED200 865 SRD H4 MB EL L1700 WH.ies	Download

© 2026 Signify Holding. All rights reserved. The information provided herein is subject to change, without notice. Signify does not give any representation or warranty as to the accuracy or completeness of the information included herein and shall not be liable for any action in reliance thereon. The information presented in this document is not intended as any commercial offer and does not form part of any quotation or contract, unless otherwise agreed by Signify. Philips and the Philips Shield Emblem are registered trademarks of Koninklijke Philips N.V.