PHILIPS

HID-Basic BSN/BMH MK4 semi-parallel for SON/CDO/CDM/MH/HPI

DBCSNSP4

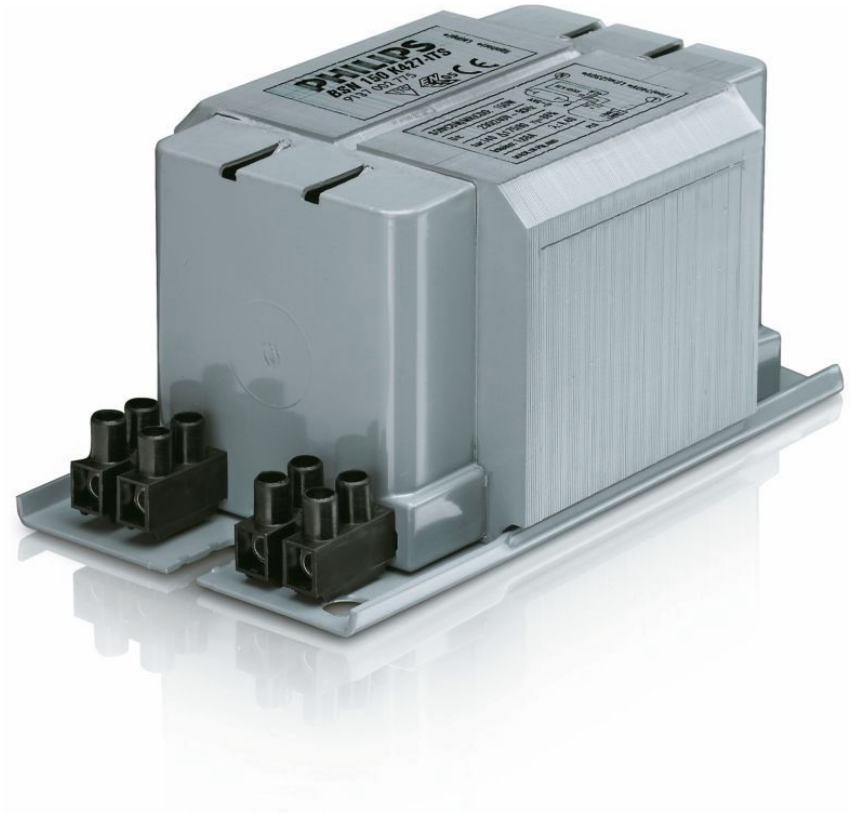

Long-lasting, reliable solution

Impregnated electromagnetic copper ballasts for use with an external semi-parallel ignitor for CDM, CDO, MH, HPI (Plus) and SON lamps

Benefits

- System design: one ignitor SKD578 can trigger all lamps from 35 to 600 W
- Long-lasting reliable solution protected from overheating; better for hot environments than its predecessors; extended warranty
- Minimal watt losses thanks to orthocyclic winding process

Applications

- Outdoor lighting
- Horticulture

Features

- Improved thermal features – much cooler ballast
- All ballasts are equipped with ThermoSwitch for protection against end-of-lamp-life phenomena
- Ballast can also be used in combination with series (superimposed) ignitor
- Equipped with screw terminal blocks as standard; insert contacts available upon request
- Ballasts for alternative mains voltages/frequencies available upon request

Versions



BSN 50 K302-A2-ITS 230V



BSN 70 K302-A2-ITS 230V



BSN 100 K302-A2-ITS 230V



BSN 150 K302-A2-ITS 230V



BSN 250 K302-A2-ITS 230V



GPPR BSN-BC4H 0002

Dimensional drawing

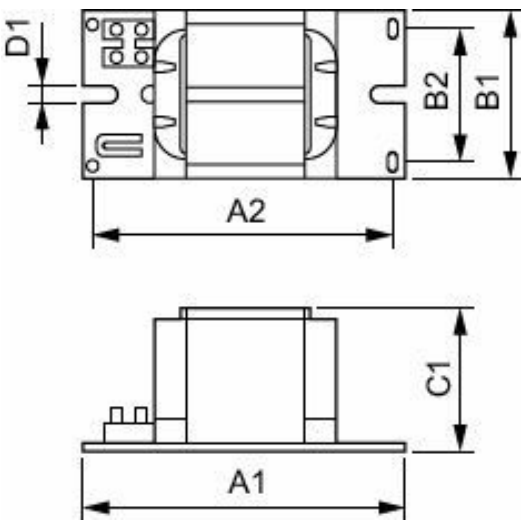

Product	D1	C1	A1	A2	B1	B2
BSN 400 K407-A2-ITS 230/240V 50Hz BC3	6.5 mm	83.0 mm	166.0 mm	145.0 mm	97.0 mm	78.5 mm

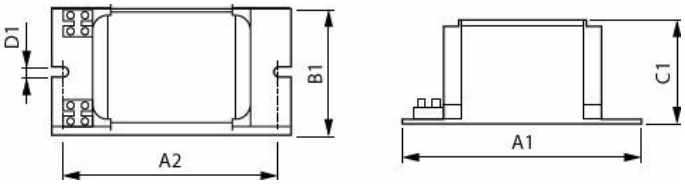

Product	A1	A2	B1	C1	D1
BSN 100 K302-A2-ITS 230V 50Hz	123 mm	98 mm	61 mm	52 mm	6.2 mm
BSN 150 K302-A2-ITS 230V 50Hz	134 mm	113 mm	76 mm	65 mm	6.2 mm
BSN 250 K302-A2-ITS 230V 50Hz	160 mm	139 mm	76 mm	65 mm	6.2 mm
BSN 50 K302-A2-ITS 230V 50Hz	118 mm	94 mm	61 mm	52 mm	6.2 mm
BSN 70 K302-A2-ITS 230V 50Hz	118 mm	94 mm	61 mm	52 mm	6.2 mm

Operating and Electrical

Line Frequency	50 Hz
Input Frequency	50 Hz

Operating and Electrical

Order Code	Full Product Name	Input Voltage
913700751926	BSN 50 K302-A2-ITS 230V 50Hz	230 V
913700752126	BSN 70 K302-A2-ITS 230V 50Hz	230 V
913700752326	BSN 100 K302-A2-ITS 230V 50Hz	230 V
913700752626	BSN 150 K302-A2-ITS 230V 50Hz	230 V
913700752926	BSN 250 K302-A2-ITS 230V 50Hz	230 V
913700277826	BSN 400 K407-A2-ITS 230/240V 50Hz BC3	230 V (default) or 240 V

© 2026 Signify Holding. All rights reserved. The information provided herein is subject to change, without notice. Signify does not give any representation or warranty as to the accuracy or completeness of the information included herein and shall not be liable for any action in reliance thereon. The information presented in this document is not intended as any commercial offer and does not form part of any quotation or contract, unless otherwise agreed by Signify. Philips and the Philips Shield Emblem are registered trademarks of Koninklijke Philips N.V.