PHILIPS

ST033T G2 LED17/940 20W WV MB WH

911401845387



Essential Smartbright Projector (Wide Voltage) Gen 2, 20 W, 1700 lm, 4000 K, 24°

Essential SmartBright Projector ST033T is a value for money product designed for Mass market trade. It is designed to replace halogen and CDM-standard-based projectors for retail and hospitality applications. This track based luminaire supports retailers to let their products stand out, or highlight certain objects. The clean and contemporary design with integrated driver makes the Essential SmartBright Projector relevant to many applications. The choice of 2 colors in White and Black helps the Retailer to choose products best suited to blend into the Store Environment. Compared to it's predecessor, it is not only cost effective, but also a more sleek and lighter product design.

General Information

Number of gear units	1 unit
Gear	EB [Electronic]
Driver included	Yes
Light source engine type	LED
Value ladder	Value
Warranty period	2 years

Light Technical

Luminous Flux	1,700 lm
Correlated Color Temperature (Nom)	4000 K
Luminous Efficacy (rated) (Nom)	85 lm/W
Color rendering index (CRI)	>90
Number of light sources	1
Beam angle of light source	24 degree(s)
Light source color	940 neutral white
Optic type	Beam angle 24°
Luminaire light beam spread	24°
Unified glare rating CEN	Not applicable
Effective projected area	0.75 m^2

Operating and Electrical

Input Voltage	110 to 240 V
Line Frequency	50 or 60 Hz

Inrush current	9.07 A
Inrush time	0.06 ms
Power Consumption	20 W
Power Factor (Fraction)	0.9
Connection	Track
Cable	-
Number of products on MCB of 16 A type B	50
Suitable for random switching	No
Protection class IEC	Safety class II

Controls and Dimming

Dimmable	-
Control interface	-
Maximum dim level	Not applicable

Mechanical and Housing

Housing Material	Aluminium
Reflector material	-
Optic material	Polycarbonate
Optical cover material	Polycarbonate
Housing Color	White RAL 9003
Mounting device	-
Optical cover finish	Clear
Overall length	159 mm
Overall width	65 mm
Overall height	209 mm
Overall diameter	65 mm
Dimensions (Height x Width x Depth)	209 x 65 x 159 mm
Ingress protection code	IP20 [Finger-protected]
Mech. impact protection code	IK03 [0.3 J]
Optical cover type	Polycarbonate
Net Weight (Piece)	0.350 kg

Approval and Application

Glow-wire test	Temperature 650 °C, duration 30 s
Flammability mark	For mounting on normally flammable surfaces
CE mark	No
ENEC mark	-
Photobiological risk	Photobiological risk group 1 @200mm to EN62778
Photobiological risk specification	0.2 m
EU RoHS compliant	Yes
Performance ambient temperature Tq	25 °C
Ambient temperature range	-20 to +45 °C

Initial Performance (IEC Compliant)

Luminous flux tolerance	-0%,+20%
Initial chromaticity	(0.38,0.38) SDCM<5
Power consumption tolerance	+/-10%

Product Data

Order product name	ST033T G2 LED17/940 20W WV MB WH
Full product name	ST033T G2 LED17/940 20W WV MB WH
Full product code	872016976721899
Order code	911401845387
Material Nr. (12NC)	911401845387
Numerator - Quantity Per Pack	1
EAN/UPC - Product/Case	8720169767218
Numerator - Packs per outer box	30
EAN/UPC - Case	8720169767379

Dimensional drawing

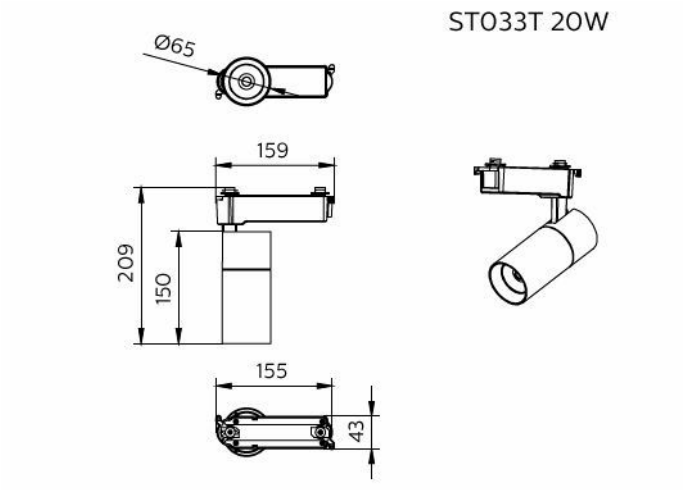

Related Documents

Documents and certificates	Document Name	Download
Installation Instructions	ST033-WV-G2-MI.pdf	Download

Photometry and lighting design	Document Name	Download
IES File	ST033T-G2-20W-WV-MB.ies	Download

© 2026 Signify Holding. All rights reserved. The information provided herein is subject to change, without notice. Signify does not give any representation or warranty as to the accuracy or completeness of the information included herein and shall not be liable for any action in reliance thereon. The information presented in this document is not intended as any commercial offer and does not form part of any quotation or contract, unless otherwise agreed by Signify. Philips and the Philips Shield Emblem are registered trademarks of Koninklijke Philips N.V.