PHILIPS

RS350 G2 RC Sq L100 2*15W 40K 24D 2H

929004130110



Deep Recessed Spotlight, 30 W, 3200 lm, 4000 K, High-gloss mirror, Dark gray

Aluminum die-cast, Dark gray, Power supply unit, 3200 lm, 30 W, 106 lm/W, 4000 K, (0.3779, 0.3683) <5SDCM, High-gloss mirror, Clear, Polycarbonate, IP20 | Finger-protected, IK03 | 0.3 J, Safety class II, Flying leads/wires

General Information

Light source replaceable	No
Number of gear units	2 units
Driver included	Yes
Nominal lifetime	25,000 hour(s)
Switching Cycle	15,000
Warranty period	1 years

Light Technical

Luminous Flux	3,200 lm
Correlated Color Temperature (Nom)	4000 K
Luminous Efficacy (rated) (Nom)	106 lm/W
Color rendering index (CRI)	90
Number of light sources	2
Light source color	940 neutral white
Optic type	High-gloss mirror
Luminaire light beam spread	24°
Photobiological safety according to EN 62471	RG1

Operating and Electrical

Input Voltage	220 to 240 V
Input Frequency	50 or 60 Hz
Inrush current	14 A
Inrush time	0.19 ms
Power Consumption	30 W
Warm-up time to 60% light	<2 s
Power Factor (Fraction)	0.9
Connection	Flying leads/wires
Cable	Cable 0.1m without plug
Number of products on MCB of 16 A type B	19
Suitable for random switching	Not applicable
Protection class IEC	Safety class II

Controls and Dimming

Dimmable	No
Driver/power unit/transformer	Power supply unit
Constant light output	No

Mechanical and Housing

Housing Material	Aluminum die-cast
Reflector material	Polycarbonate
Optic material	Polycarbonate
Optical cover material	Polycarbonate
Fixation material	Aluminum
Housing Color	Dark gray
Optical cover finish	Clear
Overall length	200 mm
Overall width	106 mm
Overall height	119 mm
Dimensions (Height x Width x Depth)	119 x 106 x 200 mm
Net weight	1.15 kg
Ingress protection code	IP20 [Finger-protected]
Mech. impact protection code	IK03 [0.3 J]
Net Weight (Piece)	1.150 kg

Approval and Application

Insulation Coverage Rating	Non IC Rating
Glow-wire test	Temperature 650 °C, duration 30 s
Flammability mark	For mounting on normally flammable surfaces
EU RoHS compliant	Yes
Warranty	3 year(s)
EyeComfort	Yes
LED Innovations	EyeComfort
Ambient temperature range	-20 to +40 °C

Initial Performance (IEC Compliant)

Luminous flux tolerance	+/-10%
Initial chromaticity	(0.3779, 0.3683) <5SDCM
Power consumption tolerance	+/-10%

Over Time Performance (IEC Compliant)

Median useful life L70B50	25,000 hour(s)

Product Data

Order product name	RS350 G2 RC Sq L100 2*15W 40K 24D 2H
Full product name	RS350 G2 RC Sq L100 2*15W 40K 24D 2H
Full product code	694197061879300
Order code	929004130110
Material Nr. (12NC)	929004130110
Numerator - Quantity Per Pack	1
EAN/UPC - Product/Case	6941970618793
Numerator - Packs per outer box	6
EAN/UPC - Case	6941970618809

Dimensional drawing

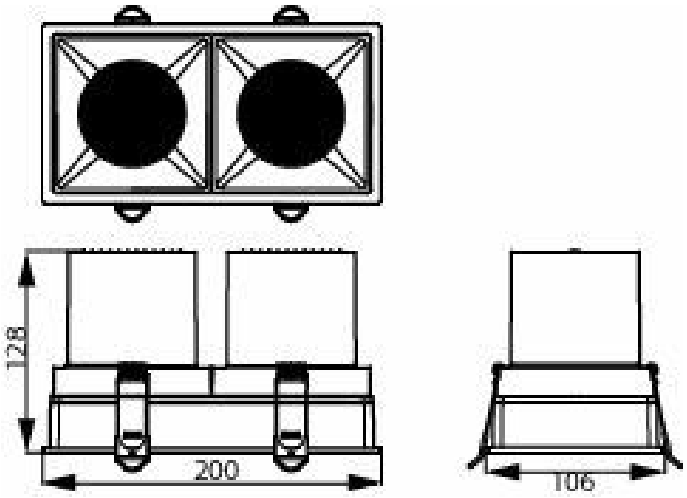

Photometric data

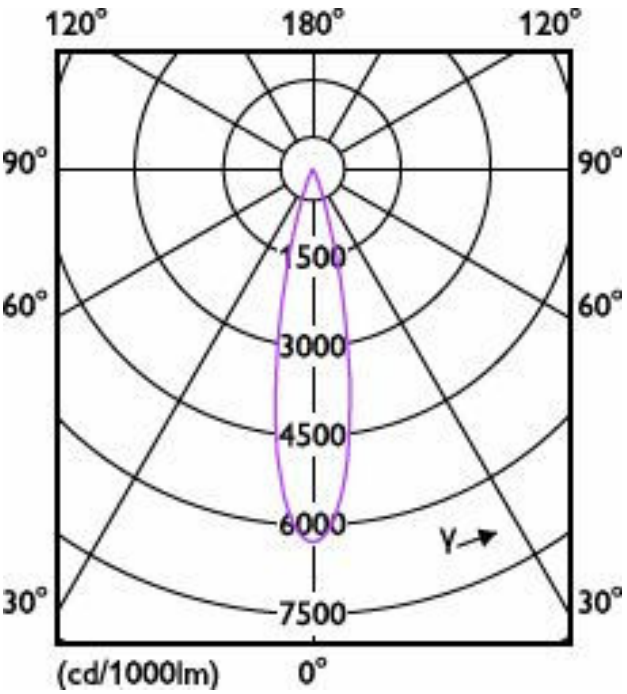

Light Distribution Diagram - RS350 G2 RC Sq L100 2*15W 40K 24D 2H

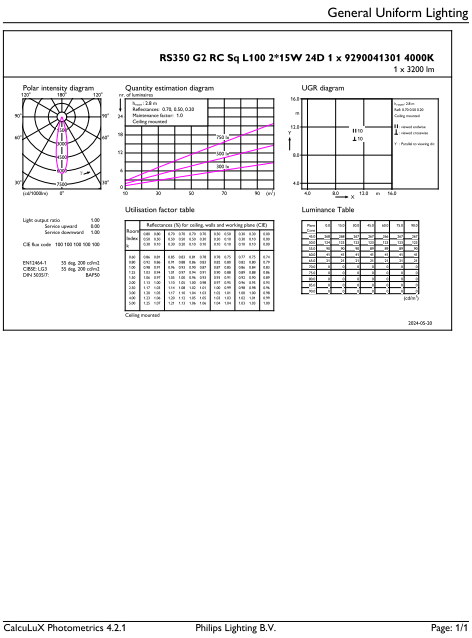
General Uniform Lighting

RS350 G2 RC Sq L100 2*15W 24D 1 x 9290041301 4000K
1 x 3200 lm

Polar intensity diagram
Quantity estimation diagram
UGR diagram
Utilisation factor table
Luminance Table

CalcuLuX Photometrics 4.2.1 Philips Lighting B.V. Page: 1/1

General uniform lighting - RS350 G2 RC Sq L100 2*15W 40K 24D 2H

Related Documents

Documents and certificates	Document Name	Download
Environmental Product Declaration	EPD-philips-Deep-Recessed-Spotlight-COMF-8880292-Ref-929004130610-20240903-EPD.pdf	Download

Photometry and lighting design	Document Name	Download
IES File	RS350-G2-RC-Sq-L100-2x15W-40K-24D-2H-9290041301-IES.ies	Download

© 2026 Signify Holding. All rights reserved. The information provided herein is subject to change, without notice. Signify does not give any representation or warranty as to the accuracy or completeness of the information included herein and shall not be liable for any action in reliance thereon. The information presented in this document is not intended as any commercial offer and does not form part of any quotation or contract, unless otherwise agreed by Signify. Philips and the Philips Shield Emblem are registered trademarks of Koninklijke Philips N.V.