YHB709 CUR 7000 SPK 2xHOLE-M8-80 RAL

912401451572



6.0 m, RAL color

One of the main characteristics of the Ocean family range, part of Philips' UrbanStyling approach, is the total solution it offers municipalities, landscape architects, urban planners and lighting designers. Urban enhancement can only be achieved when both the luminaires and their supports form part of an integrated concept. To this end, the Ocean family includes a range of dedicated poles and brackets which are consistent with the visual style of the Ocean Road LED and Ocean Ambiance LED luminaires.

Mechanical and Housing

Fixation diameter	Mounting device diameter 60 mm
Pole top diameter	60 mm
Pole height	6.0 m
Pole color	RAL color
Pole type	Pole with flange
Net Weight (Piece)	52.500 kg

Approval and Application

CE mark	Yes
EU RoHS compliant	Yes

Sustainability Data

Non-virgin material ratio of the packaging	Cardboard > 80% recycled
Packaging Recyclable content ratio	Cardboard recycling rate > 80%
Packaging Material	Cardboard

Product Data

Order product name	YHB709 CUR 7000 SPK 2xHOLE-M8-80 RAL
Full product name	YHB709 CUR 7000 SPK 2xHOLE-M8-80 RAL
Full product code	871869693789100
Order code	912401451572
Material Nr. (12NC)	912401451572
Numerator - Quantity Per Pack	1
EAN/UPC - Product/Case	8718696937891
Numerator - Packs per outer box	1
EAN/UPC - Case	8718696937891

Dimensional drawing

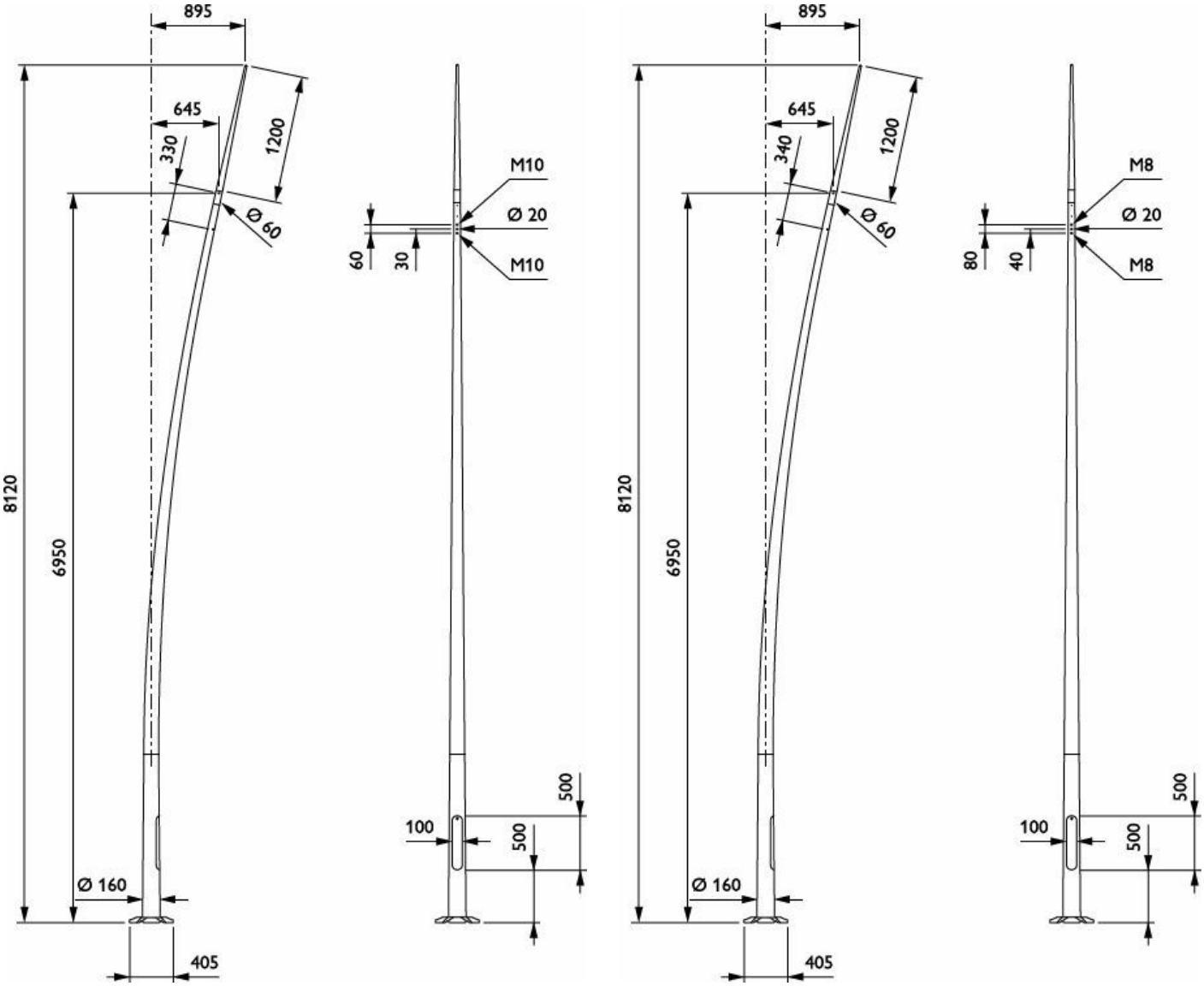

© 2026 Signify Holding. All rights reserved. The information provided herein is subject to change, without notice. Signify does not give any representation or warranty as to the accuracy or completeness of the information included herein and shall not be liable for any action in reliance thereon. The information presented in this document is not intended as any commercial offer and does not form part of any quotation or contract, unless otherwise agreed by Signify. All trademarks are owned by Signify Holding or their respective owners.