PHILIPS

BN126C LED35S/840 PSU L1500

911401834384

Service tag

CoreLine Batten, 25.5 W, L1500 mm, 3500 lm, 4000 K, Opal, IP20/40, TW1-ready

L1500 mm, Steel, White, Signal white (RAL9003), Power supply unit (On/Off), 3500 lm, 25.5 W, 137 lm/W, 4000 K, (0.38, 0.38) SDCM≤3, Beam angle 120°, Opal, Polycarbonate, IP20/40 | Finger-protected;Wire-protected, IK04 | 0.5 J standard plus, Safety class I, Push-in connector 3-pole, Simple Connection and removable cover available for feed-through wiring 1-phase (internal wiring is not included)

Warnings and Safety

- The product is IPX0 & as such is not protected against water ingress & as such we strongly recommend that the environment in which the luminaire is to be installed is suitably checked
- If the above advice is not taken and the luminaires are subject to water ingress, Philips / Signify cannot guarantee safe failure & product warranty will become void

General Information

Light source replaceable	No
Number of gear units	1 unit
Driver included	Yes
Sustainability rating	Unclassified
Service tag	Yes
Lighting Technology	LED
Value ladder	Performance
Warranty period	5 years

Light Technical

Luminous Flux	3,500 lm
Saturated Red (R9)	<50
Correlated Color Temperature (Nom)	4000 K
Luminous Efficacy (rated) (Nom)	137 lm/W
Color rendering index (CRI)	>80
Light source color	840 neutral white
Optic type	Beam angle 120°
Luminaire light beam spread	120°
Unified glare rating CEN	26

Operating and Electrical

Input Voltage	220-240 V
Line Frequency	50 or 60 Hz
Inrush current	10 A
Inrush time	0.508 ms
Power Consumption	25.5 W
Power Factor (Fraction)	0.9
Connection	Push-in connector 3-pole
Cable	-
Number of products on MCB of 16 A type B	16
Suitable for random switching	Yes
Protection class IEC	Safety class I
Feed-through wiring	Simple Connection and removable cover available for feed-through wiring 1-phase (internal wiring is not included)

Controls and Dimming

Dimmable	No
Driver/power unit/transformer	Power supply unit (On/Off)
Control interface	-
Constant light output	No

Mechanical and Housing

Housing Material	Steel
Reflector material	-
Optic material	Polycarbonate
Optical cover material	Polycarbonate
Fixation material	-
Housing Color	White
Optical cover finish	Opal
Overall length	1,450 mm
Overall width	65 mm
Overall height	65 mm
Dimensions (Height x Width x Depth)	65 x 65 x 1450 mm
Ingress protection code	IP20/40 [Finger-protected;Wire-protected]
Mech. impact protection code	IK04 [0.5 J standard plus]
Net Weight (Piece)	1.360 kg

Approval and Application

Glow-wire test	Temperature 650 °C, duration 30 s
Flammability mark	For mounting on normally flammable surfaces
CE mark	Yes
ENEC mark	ENEC mark
Photobiological risk	Photobiological risk group 0 @200mm to EN62778
Photobiological risk specification	0.2 m
EU RoHS compliant	Yes
Performance ambient temperature Tq	25 °C
Flickering value (PstLM) - Flickering value as per EN 61000-3-3	1
Stroboscopic effect visibility measure (SVM)	1.6
Ambient temperature range	-20 to +40 °C

Initial Performance (IEC Compliant)

Luminous flux tolerance	+/-10%
Initial chromaticity	(0.38, 0.38) SDCM≤3
Power consumption tolerance	+/-10%
Standard Deviation of Colour Matching (McAdam ellipse)	SDCM≤3

Over Time Performance (IEC Compliant)

Control gear failure rate at median useful life 50000 h	5 %
Lumen maintenance (EN-IEC 62722-2-1) at median useful life* 50000 h	L80
Lumen maintenance (EN-IEC 62722-2-1) at median useful life* 100000 h	L70

Sustainability Data

Repair class	Repair Class D, this product is not designed to be repaired.
Embedded carbon (A1-A3)	17.1 kg CO_2e
Product non-virgin material ratio	26.1 %
Recyclable content ratio of the finished product	67.2 %
GWP total B6 (kg CO2eq) Declared Unit	Please calculate using your local energy mix value: Power Declared Unit (kW) * Service life (hrs) Declared Unit * Energy mix (kg CO2eq / kwh)
GWP total B6 (kg CO2eq) Functional Unit	Please calculate using your local energy mix value: Power Declared Unit (kW) * 1000 (lm) /lumen output (lm) Declared Unit * 35000 (hrs) * Energy mix (kg CO2 eq / kwh)
Non-virgin material ratio of the packaging	Cardboard > 80% recycled
Packaging Recyclable content ratio	Cardboard recycling rate > 80%
Packaging Material	Cardboard

Product Data

Order product name	BN126C LED35S/840 PSU L1500
Full product name	BN126C LED35S/840 PSU L1500
Full product code	871951494882299
Order code	911401834384
Material Nr. (12NC)	911401834384
Numerator - Quantity Per Pack	1
EAN/UPC - Product/Case	8719514948822
Numerator - Packs per outer box	6
EAN/UPC - Case	8719514949041

Dimensional drawing

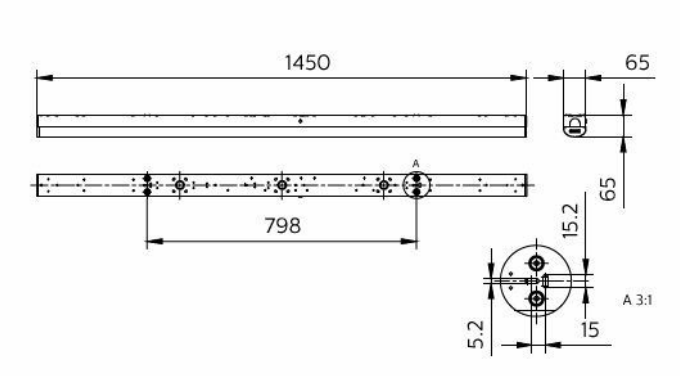

Polar normal diagrams

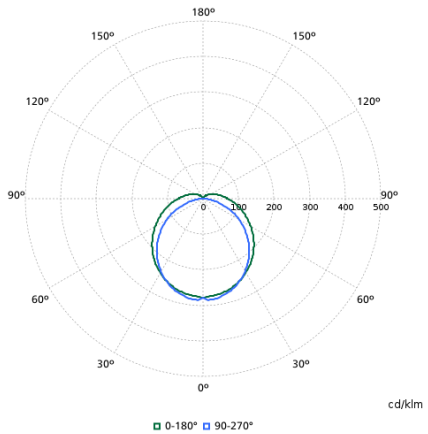

Compatible Accesories

Accessory Image	Accessory Code	Accessory Name	Website
	911401776802	BN126Z SC	Product Website

Related Documents

Documents and certificates	Document Name	Download
Environmental Product Declaration	EPD-Philips-CoreLine-Batten-BN126C-LED35S-840-PSU-L1500-911401834384.pdf	Download
Installation Instructions	BN126C G4-MI-PSU_V4_2023 05.pdf	Download
Tender text	Tender_Text_911401834384_en_AA.txt	Download

Photometry and lighting design	Document Name	Download
IES File	bn126c-led35s-840-psu-l1500-911401834384.ies	Download
LDT File	bn126c-led35s-840-psu-l1500-911401834384.ldt	Download
ROLF File	bn126c-led35s-840-psu-l1500-911401834384.rolfz	Download
ULD File	bn126c-led35s-840-psu-l1500-911401834384.uld	Download
Revit file	bn126c-led35s-840-psu-l1500-911401834384.zip	Download

© 2026 Signify Holding. All rights reserved. The information provided herein is subject to change, without notice. Signify does not give any representation or warranty as to the accuracy or completeness of the information included herein and shall not be liable for any action in reliance thereon. The information presented in this document is not intended as any commercial offer and does not form part of any quotation or contract, unless otherwise agreed by Signify. Philips and the Philips Shield Emblem are registered trademarks of Koninklijke Philips N.V.