PHILIPS

**RS078B P9 930 PSU-E WB D75 M-WH WH**

911401842189



# SmartBright Pro Spotlight, 9 W, 930 warm white, IP20 | Finger-protected

SmartBright Pro Spotlight is an economical line of deep recessed spotlights engineered with a compact design and tiltable functionality. Built with a robust, high-quality finish, it combines durability with a refined aesthetic. Offering wide options and improved visual comfort, this series delivers professional performance, making it a stylish and user-friendly solution for general indoor spaces.

## General Information

| | |
|---|---|
| Driver included | Yes |
| Light source engine type | LED |
| Warranty period | 3 years |

## Light Technical

| | |
|---|---|
| Luminous Flux | 720 lm |
| Correlated Color Temperature (Nom) | 3000 K |
| Luminous Efficacy (rated) (Nom) | 80 lm/W |
| Color rendering index (CRI) | ≥90 |
| Light source color | 930 warm white |
| Unified glare rating CEN | Not applicable |

## Operating and Electrical

| | |
|---|---|
| Input Voltage | 220 to 240 V |
| Line Frequency | 50 or 60 Hz |
| Inrush current | 1.3 A |
| Power Consumption | 9 W |
| Power Factor (Fraction) | 0.9 |
| Number of products on MCB of 16 A type B | 360 |
| Suitable for random switching | No |
| Protection class IEC | Safety class II |

## Controls and Dimming

| | |
|---|---|
| Dimmable | No |
| Control interface | - |

## Mechanical and Housing

| | |
|---|---|
| Housing Material | Aluminum die-cast |
| Optical cover material | Polycarbonate |
| Housing Color | White |
| Optical cover finish | Structured optic |
| Overall height | 62 mm |
| Overall diameter | 85 mm |
| Ingress protection code | IP20 [Finger-protected] |
| Mech. impact protection code | IK03 [0.3 J] |
| Optical cover type | Lens |
| Net Weight (Piece) | 0.198 kg |

## Approval and Application

| | |
|---|---|
| Flammability mark | For mounting on normally flammable surfaces |
| CE mark | No |
| ENEC mark | - |
| Ambient temperature range | -20 to +40 °C |

## Dimensional drawing

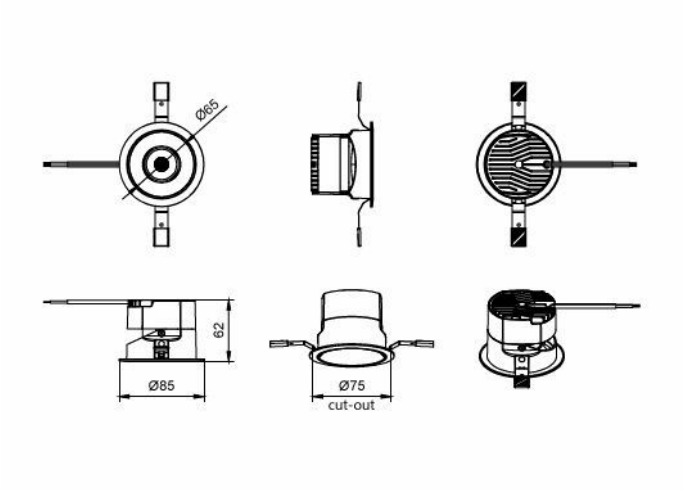


## Initial Performance (IEC Compliant)

| | |
|---|---|
| Luminous flux tolerance | -10% / +10% |
| Initial chromaticity | (0.38,0.38) SDCM≤5 |
| Power consumption tolerance | +/-10% |

## Product Data

| | |
|---|---|
| Order product name | RS078B P9 930 PSU-E WB D75 M-WH WH |
| Full product name | RS078B P9 930 PSU-E WB D75 M-WH WH |
| Full product code | 872110372773299 |
| Order code | 911401842189 |
| Material Nr. (12NC) | 911401842189 |
| Numerator - Quantity Per Pack | 1 |
| EAN/UPC - Product/Case | 8721103727732 |
| Numerator - Packs per outer box | 30 |
| EAN/UPC - Case | 8721103727817 |

## Related Documents

| Documents and certificates | Document Name | Download |
|---|---|---|
| Installation Instructions | SmartBright-Pro-Spotlight-RS078B-MI.pdf | Download |

| Photometry and lighting design | Document Name | Download |
|---|---|---|
| IES File | RS078B-P9-940-PSU-E-MB-D75-M-WH-WH-1.ies | Download |

© 2026 Signify Holding. All rights reserved. The information provided herein is subject to change, without notice. Signify does not give any representation or warranty as to the accuracy or completeness of the information included herein and shall not be liable for any action in reliance thereon. The information presented in this document is not intended as any commercial offer and does not form part of any quotation or contract, unless otherwise agreed by Signify. Philips and the Philips Shield Emblem are registered trademarks of Koninklijke Philips N.V.