PHILIPS

RC136B G4
34_43_57S/830 PSD
W30L120 OC
911401840687



Multi Lumen

CoreLine recessed gen 4, All-in, 38.5 W, 23 W, 1200x300 mm, VPC, 3400 lm, 4300 lm, 5700 lm, 3000 K, DALI, UGR19, EL-ready

1200x300 mm, Visible profile ceiling version, Steel, White, Signal white (RAL9003), Power supply unit with DALI interface, All-in, Multi Lumen, 3400 lm, 4300 lm, 5700 lm, 38.5 W, 23 W, 148 lm/W, 148 lm/W, 3000 K, (0.44,0.40)SDCM<3, UGR19, Wide beam office compliant, Microprismatic lens, Polycarbonate, IP20/44 | Finger-protected; wire-protected, splash-proof, IK03 | 0.35 J reinforced, Safety class II, Cable without plug 5-pole, Push-in connector 4-pole, SC | Safety cable, Self-contained emergency lighting is possible when used with a compatible battery kit accessory

General Information

Number of gear units	1 unit
Driver included	Yes
Sustainability rating	Unclassified
Service tag	No
Value ladder	Performance
Warranty period	5 years

Light Technical

Luminous Flux	3,400 lm
Correlated Color Temperature (Nom)	3000 K
Luminous Efficacy (rated) (Nom)	148 lm/W
Color rendering index (CRI)	>80
Light source color	830 warm white
Optic type	Wide beam office compliant
Luminaire light beam spread	80°
Unified glare rating CEN	19
All-in Type	All-in, Multi Lumen

Operating and Electrical

Input Voltage	220-240 V
Line Frequency	50 or 60 Hz
Inrush current	5.33 A
Inrush time	0.04 ms
Power Consumption	38.5 W
Power Factor (Fraction)	0.9
Connection	Push-in connector 4-pole
Cable	Cable without plug 5-pole
Number of products on MCB of 16 A type B	73
Suitable for random switching	Yes
Protection class IEC	Safety class II

Controls and Dimming

Dimmable	Yes
Driver/power unit/transformer	Power supply unit with DALI interface
Control interface	DALI
Constant light output	No
DALI Standard	DALI-2™

Mechanical and Housing

Housing Material	Steel
Reflector material	Steel
Optic material	Polycarbonate
Optical cover material	Polycarbonate
Fixation material	-
Housing Color	White
Optical cover finish	Microprismatic lens
Overall length	1,195 mm
Overall width	295 mm
Overall height	38.5 mm
Dimensions (Height x Width x Depth)	39 x 295 x 1195 mm
Compatible ceiling or ceiling installation accessory type	Visible profile ceiling version
Ingress protection code	IP20/44 [Finger-protected; wire-protected, splash-proof]
Mech. impact protection code	IK03 [0.35 J reinforced]
Safety device	SC [Safety cable]
Net Weight (Piece)	2.950 kg

Emergency Operation

Emergency flux	380 lm
Central Emergency	No
Emergency lighting	Self-contained emergency lighting is possible when used with a compatible battery kit accessory

Approval and Application

Glow-wire test	Temperature 650 °C, duration 30 s
Flammability mark	For mounting on normally flammable surfaces
CE mark	Yes
ENEC mark	ENEC mark
Photobiological risk	Photobiological risk group 0 @200mm to EN62778
EU RoHS compliant	Yes
Performance ambient temperature Tq	25 °C
Ambient temperature range	-10 to +40 °C

Initial Performance (IEC Compliant)

Luminous flux tolerance	+/-10%
Initial chromaticity	(0.44,0.40)SDCM<3
Power consumption tolerance	+/-10%

Over Time Performance (IEC Compliant)

Control gear failure rate at median useful life 50000 h	5 %
Lumen maintenance (EN-IEC 62722-2-1) at median useful life* 50000 h	L90
Lumen maintenance (EN-IEC 62722-2-1) at median useful life* 100000 h	L80

Sustainability Data

Repair class	Repair Class D, this product is not designed to be repaired.
Embedded carbon (A1-A3)	29.3 kg CO_2e
Product non-virgin material ratio	21.9 %
Recyclable content ratio of the finished product	68.1 %
GWP total B6 (kg CO2eq) Declared Unit	Please calculate using your local energy mix value: Power Declared Unit (kW) * Service life (hrs) Declared Unit * Energy mix (kg CO2eq / kwh)
GWP total B6 (kg CO2eq) Functional Unit	Please calculate using your local energy mix value: Power Declared Unit (kW) * 1000 (lm) /lumen output (lm) Declared Unit * 35000 (hrs) * Energy mix (kg CO2 eq / kwh)
Non-virgin material ratio of the packaging	Cardboard > 80% recycled
Packaging Recyclable content ratio	Cardboard recycling rate > 80%
Packaging Material	Cardboard

Dimensional drawing

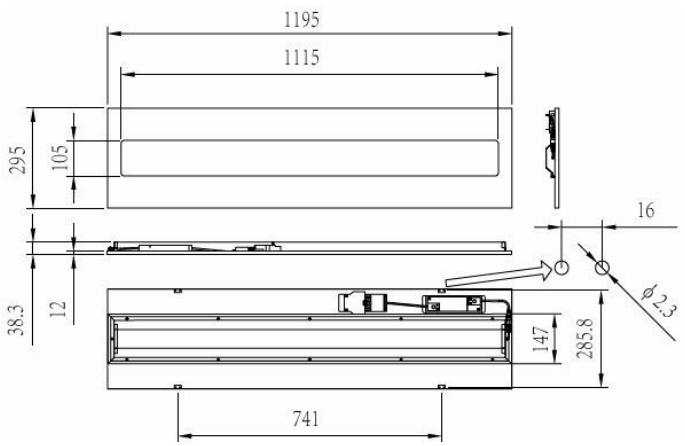

Product Data

Order product name	RC136B G4 34_43_57S/830 PSD W30L120 OC
Full product name	RC136B G4 34_43_57S/830 PSD W30L120 OC
Full product code	872016976411899
Order code	911401840687
Material Nr. (12NC)	911401840687
Numerator - Quantity Per Pack	1
EAN/UPC - Product/Case	8720169764118
Numerator - Packs per outer box	4
EAN/UPC - Case	8720169764392

Polar normal diagrams

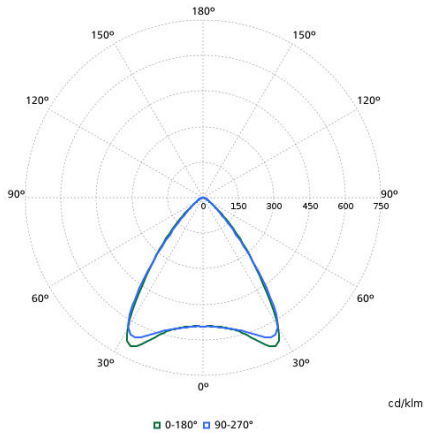

Compatible Accesories

Accessory Image	Accessory Code	Accessory Name	Website
	911401807987	RC159Z SMB W30L120	Product Website
	911401809287	RC159Z Plaster Ceiling SMB-PLC	Product Website
	911401809387	RC159Z Suspension set SME-4 WH	Product Website
	911401871188	RC159Z SMB W30L120 PREF	Product Website
	912401483602	EM300V ELB_ELP3 kit LV 3.6V 4800mAh LIB	Product Website

Related Documents

Documents and certificates	Document Name	Download
Environmental Product Declaration	EPD-Philips-RC136B-G4-36-45-60S-840-PSD-W30L120-OC-Coreline-recessed-911401840887.pdf	Download
Installation Instructions	Installation-instructions-CoreLine-recessed-Gen4v2.pdf	Download

Photometry and lighting design	Document Name	Download
IES File	rc136b-g4-34-43-57s-830-psd-w30l120-oc-911401840687.ies	Download
LDT File	rc136b-g4-34-43-57s-830-psd-w30l120-oc-911401840687.ldt	Download
ROLF File	rc136b-g4-34-43-57s-830-psd-w30l120-oc-911401840687.rolfz	Download
ULD File	rc136b-g4-34-43-57s-830-psd-w30l120-oc-911401840687.uld	Download
Revit file	rc136b-g4-34-43-57s-830-psd-w30l120-oc-911401840687.zip	Download

© 2026 Signify Holding. All rights reserved. The information provided herein is subject to change, without notice. Signify does not give any representation or warranty as to the accuracy or completeness of the information included herein and shall not be liable for any action in reliance thereon. The information presented in this document is not intended as any commercial offer and does not form part of any quotation or contract, unless otherwise agreed by Signify. Philips and the Philips Shield Emblem are registered trademarks of Koninklijke Philips N.V.