PHILIPS

HF-Matchbox Blue

EMTLCFL



Robust design, compact form

HF-Matchbox Blue is an affordable, reliable, compact, lightweight and high-frequency ballast for use with system wattages below 25 W in combination with TL mini, TL-D, TL5 and TL5c, PL-T/C, and PL-L/S lamps. The HF-M Blue range has a robust design, meets all relevant international safety and performance standards and has an energy efficiency index (CELMA EEI) of A2. The ballast is primarily designed for Indoor application. For outdoor application, the luminaire should be minimum Classland need to be sufficiently protected against water & dust. The installation should also be guard against any lightening surge or any other necessary electrical protection as deemed in such typical installation & application.

Benefits

- Automatic restart (after voltage dip or lamp exchange) ensures easy operation and hassle-free re-lamping.
- Suitable for use in class I or class II luminaires

Applications

- Used with movement-detection control systems like Philips OccuPlus in applications where lamps burn for a long period of time and the switching cycle is infrequent (e.g. a maximum of three times per day)
- Mainly for indoor applications such as spotlights, downlights, light boxes, and emergency and security fixtures used largely in retail stores, office buildings, hotels, private homes and residential buildings
- Domestic applications such as outdoor garden lighting, garage areas, stairways

Features

- Suitable for emergency DC operation between 190 and 254 V
- Programmed, flicker-free, pre-heated start (<0.8 s); over 8,000 on/off switches on one lamp (depending on lamp/ ballast combination)
- Automatic restart (after voltage dip or lamp exchange) ensures easy operation and hassle-free re-lamping.

Versions



GPPR MTL-LH 0001



GPPR_MTL-LH_0002-Product photo



GPPR MTL-LH 0003



GPPR_MTL-SH_0002-Product photo

Dimensional drawing

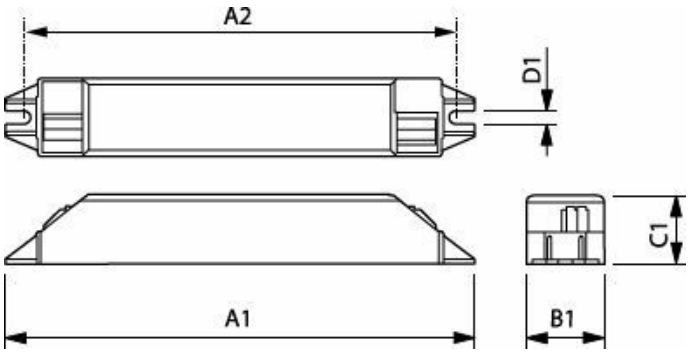

Product	A1	A2	B1	C1	D1
HF-M BLUE 121 LH TL5 230-240V	187 mm	180 mm	22 mm	22 mm	4.4 mm
HF-M BLUE 124 LH TL/TL5/PL-L 230-240V	187 mm	180 mm	22 mm	22 mm	4.4 mm

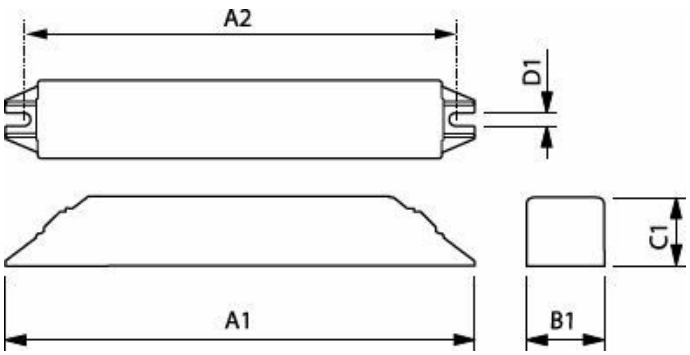

Product	A1	A2	B1	C1	D1
HF-M BLUE 109 LH TL/PL-S 230-240V	144 mm	133 mm	22 mm	22 mm	4.2 mm
HF-M BLUE 114 LH TL/PL-S/PL-C 230-240V	144 mm	133 mm	22 mm	22 mm	4.2 mm

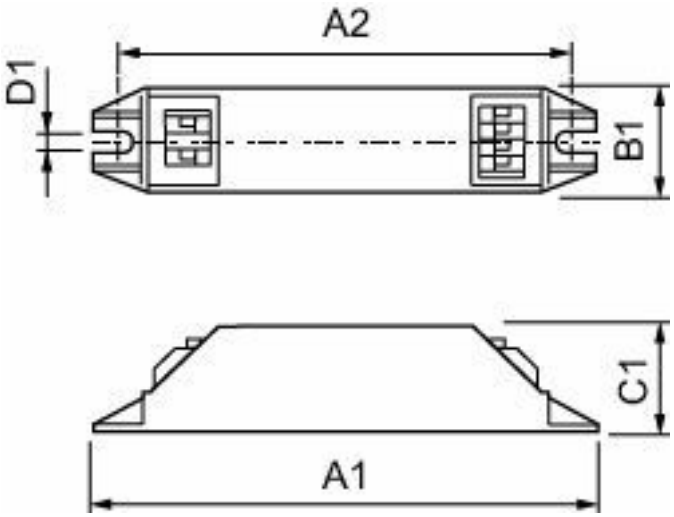

Product
HF-M BLUE 109 LH TL/PL-S 230-240V
HF-M BLUE 114 LH TL/PL-S/PL-C 230-240V
HF-M BLUE 121 LH TL5 230-240V
HF-M BLUE 124 LH TL/TL5/PL-L 230-240V

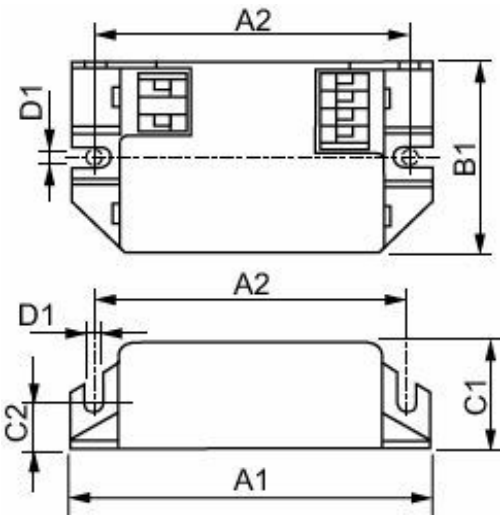

Product
HF-M BLUE 124 SH TL/TL5/PL-L 230-240V

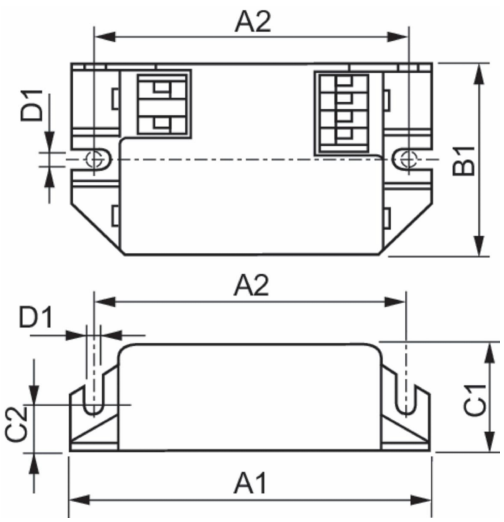

Product	A1	A2	B1	C1	D1
HF-M BLUE 124 SH TL/TL5/PL-L 230-240V	94 mm	84 mm	40 mm	22 mm	4.4 mm

Operating and Electrical

Input Voltage	230 to 240 V
Line Frequency	50 to 60 Hz
Input Frequency	50 to 60 Hz

Operating and Electrical

Order Code	Full Product Name	Number of Products on MCB (16A Type B) (Nom)
913700421366	HF-M BLUE 109 LH TL/PL-S 230-240V	159
913700421766	HF-M BLUE 114 LH TL/PL-S/PL-C 230-240V	101
913700418066	HF-M BLUE 124 LH TL/TL5/PL-L 230-240V	60
913700418366	HF-M BLUE 121 LH TL5 230-240V	59
913700417966	HF-M BLUE 124 SH TL/TL5/PL-L 230-240V	60

Mechanical and Housing

Order Code	Full Product Name	Housing
913700421366	HF-M BLUE 109 LH TL/PL-S 230-240V	LH
913700421766	HF-M BLUE 114 LH TL/PL-S/PL-C 230-240V	LH
913700418066	HF-M BLUE 124 LH TL/TL5/PL-L 230-240V	LH
913700418366	HF-M BLUE 121 LH TL5 230-240V	LH
913700417966	HF-M BLUE 124 SH TL/TL5/PL-L 230-240V	SH

© 2026 Signify Holding. All rights reserved. The information provided herein is subject to change, without notice. Signify does not give any representation or warranty as to the accuracy or completeness of the information included herein and shall not be liable for any action in reliance thereon. The information presented in this document is not intended as any commercial offer and does not form part of any quotation or contract, unless otherwise agreed by Signify. Philips and the Philips Shield Emblem are registered trademarks of Koninklijke Philips N.V.