PHILIPS

Lighting

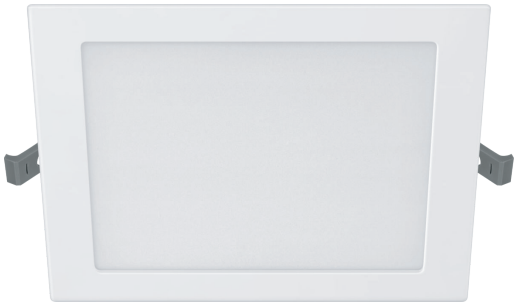

Superslim LED downlight offering superior light quality with extremely good uniformity

External Slim Downlight DL252

A complete family delivering superior light with great uniformity and safety. Choose the best fit for every projects, from multiple lumen packs/wattages, and enjoy great reliable performance free of maintenance.

Benefits

- Superior light quality: Bright and uniform light
- Wide range of products: Variety in lumen/wattage and CCT combinations to cater to different applications.
- Easy installation: Slim design ensures fit in tight spaces

Features

- Design robustness with metal housing
- High efficiency for energy saving: up to 83lm/W
- Long lifetime of 25,000 hours

Application

- Retail
- Offices
- Hospitality

External Slim Downlight DL252

Dimensional drawing

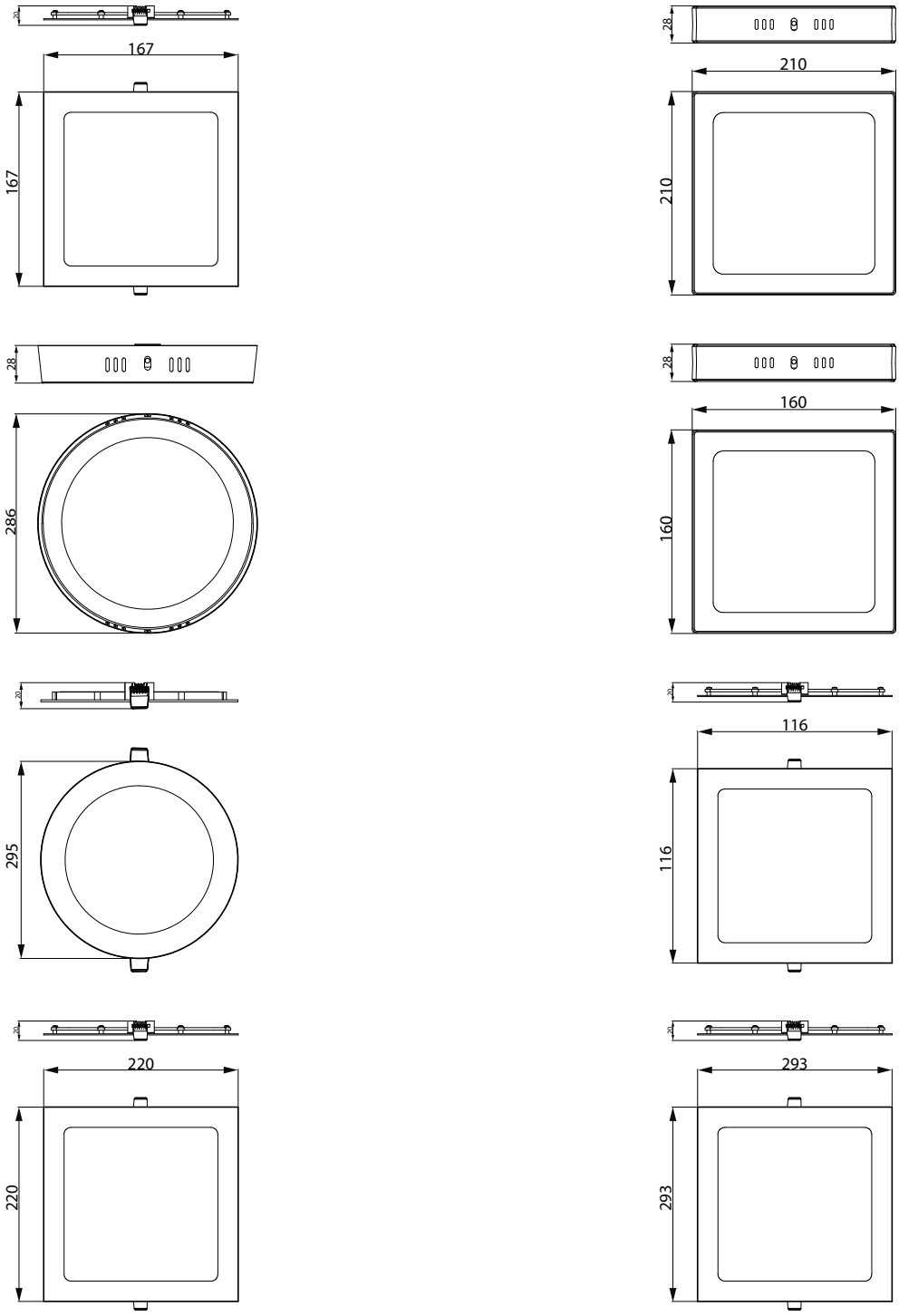

External Slim Downlight DL252

Dimensional drawing

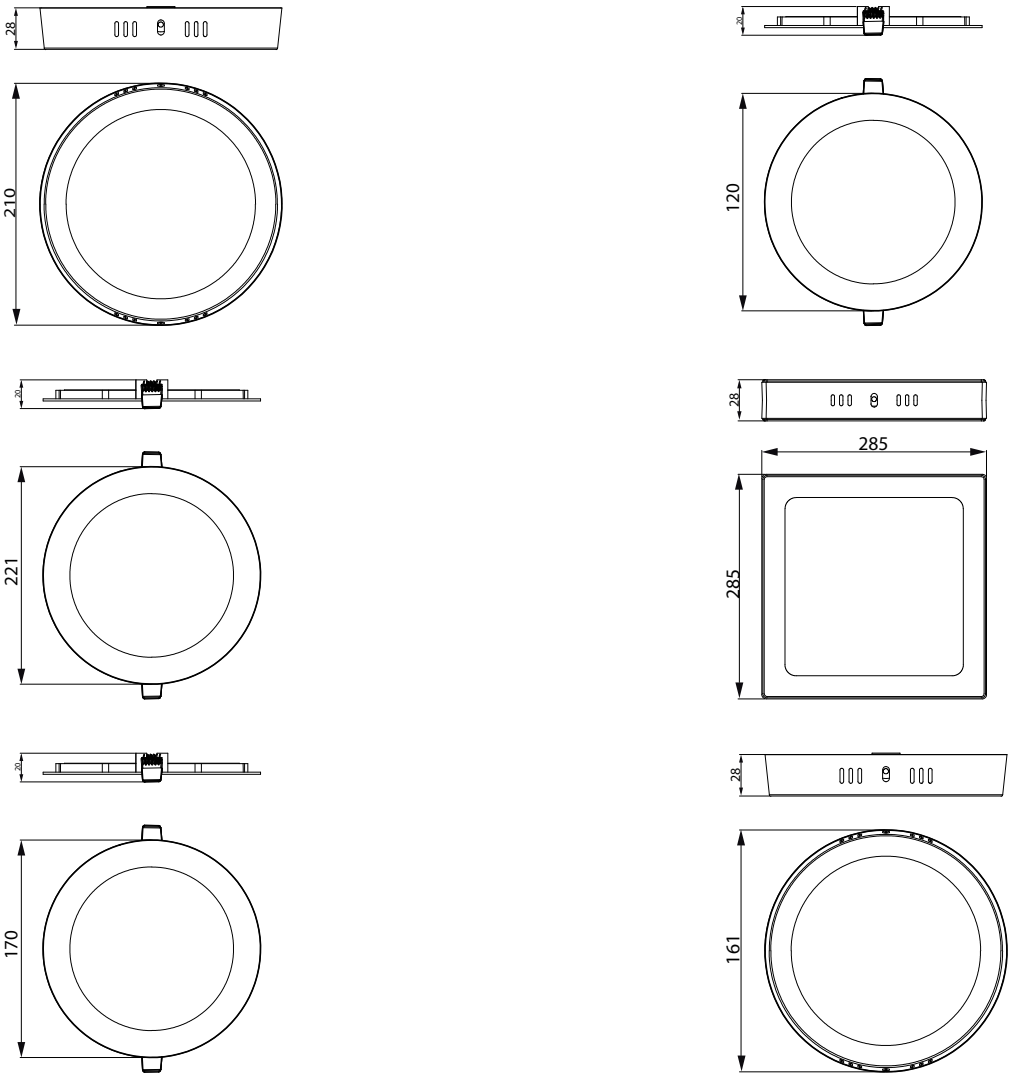

External Slim Downlight DL252

General Information

Driver included	Yes
Light source replaceable	No
Number of gear units	1 unit

Light Technical

Color rendering index (CRI)	80

Operating and Electrical

Protection class IEC	Safety class II
Input Voltage	110 to 240 V
Line Frequency	50 or 60 Hz

Controls and Dimming

Dimmable	No

Mechanical and Housing

Housing Color	White
Ingress protection code	IP20

Approval and Application

Flammability mark	For mounting on normally flammable surfaces
Glow-wire test	Temperature 650 °C, duration 30 s

Light Technical

Order Code	Full Product Name	Correlated Color Temperature (Nom)	Luminous Efficacy (rated) (Nom)	Luminous Flux	Optic type
929002636101	DL252 G2 SF RD LED 2000 30K 24W 11" WV	3000 K	83.00 lm/W	2,000 lm	Wide beam
929002636201	DL252 G2 SF RD LED 2000 40K 24W 11" WV	4000 K	83.00 lm/W	2,000 lm	Wide beam
929002636301	DL252 G2 SF RD LED 2000 65K 24W 11" WV	6500 K	83.00 lm/W	2,000 lm	Wide beam
929002635201	DL252 G2 SF SQ LED 900 30K 12W 6" WV	3000 K	75.00 lm/W	900 lm	Wide beam
929002635301	DL252 G2 SF SQ LED 900 40K 12W 6" WV	4000 K	75.00 lm/W	900 lm	Wide beam
929002635401	DL252 G2 SF SQ LED 900 65K 12W 6" WV	6500 K	75.00 lm/W	900 lm	Wide beam
929002635801	DL252 G2 SF SQ LED 1300 30K 18W 8" WV	3000 K	72.00 lm/W	1,300 lm	Wide beam
929002635901	DL252 G2 SF SQ LED 1300 40K 18W 8" WV	4000 K	72.00 lm/W	1,300 lm	Wide beam
929002636001	DL252 G2 SF SQ LED 1300 65K 18W 8" WV	6500 K	72.00 lm/W	1,300 lm	Wide beam
929002636401	DL252 G2 SF SQ LED 2000 30K 24W 11" WV	3000 K	83.00 lm/W	2,000 lm	Wide beam
929002636501	DL252 G2 SF SQ LED 2000 40K 24W 11" WV	4000 K	83.00 lm/W	2,000 lm	Wide beam
929002636601	DL252 G2 SF SQ LED 2000 65K 24W 11" WV	6500 K	83.00 lm/W	2,000 lm	Wide beam
929002321901	DL252 G2 R Rd LED 1300 30K 18W 8" WV 1pk	3000 K	72.00 lm/W	1,300 lm	Wide beam
929002322001	DL252 G2 R Rd LED 1300 40K 18W 8" WV 1pk	4000 K	72.00 lm/W	1,300 lm	Wide beam
929002322101	DL252 G2 R Rd LED 1300 65K 18W 8" WV 1pk	6500 K	72.00 lm/W	1,300 lm	Wide beam
929002322501	DL252 G2 R Rd LED 900 30K 12W 6" WV 1pk	3000 K	75.00 lm/W	900 lm	Wide beam
929002322601	DL252 G2 R Rd LED 900 40K 12W 6" WV 1pk	4000 K	75.00 lm/W	900 lm	Wide beam
929002322701	DL252 G2 R Rd LED 900 65K 12W 6" WV 1pk	6500 K	75.00 lm/W	900 lm	Wide beam
929002345401	DL252 G2 R Rd LED 400 30K 6W 4" WV	3000 K	66.00 lm/W	400 lm	Beam angle 110°
929002345501	DL252 G2 R Rd LED 400 40K 6W 4" WV	4000 K	66.00 lm/W	400 lm	Beam angle 110°
929002345601	DL252 G2 R Rd LED 400 65K 6W 4" WV	6500 K	66.00 lm/W	400 lm	Beam angle 110°
929002346001	DL252 G2 R Rd LED 2000 30K 24W 11" WV	3000 K	83.00 lm/W	2,000 lm	Beam angle 110°
929002346101	DL252 G2 R Rd LED 2000 40K 24W 11" WV	4000 K	83.00 lm/W	2,000 lm	Beam angle 110°
929002346201	DL252 G2 R Rd LED 2000 65K 24W 11" WV	6500 K	83.00 lm/W	2,000 lm	Beam angle 110°

External Slim Downlight DL252

Order Code	Full Product Name	Correlated Color Temperature (Nom)	Luminous Efficacy (rated) (Nom)	Luminous Flux	Optic type
929002634901	DL252 G2 SF RD LED 900 30K 12W 6" WV	3000 K	75.00 lm/W	900 lm	Wide beam
929002635001	DL252 G2 SF RD LED 900 40K 12W 6" WV	4000 K	75.00 lm/W	900 lm	Wide beam
929002635101	DL252 G2 SF RD LED 900 65K 12W 6" WV	6500 K	75.00 lm/W	900 lm	Wide beam
929002635501	DL252 G2 SF RD LED 1300 30K 18W 8" WV	3000 K	72.00 lm/W	1,300 lm	Wide beam
929002635601	DL252 G2 SF RD LED 1300 40K 18W 8" WV	4000 K	72.00 lm/W	1,300 lm	Wide beam
929002635701	DL252 G2 SF RD LED 1300 65K 18W 8" WV	6500 K	72.00 lm/W	1,300 lm	Wide beam
929002322201	DL252 G2 R SQ LED 1300 30K 18W 8" WV 1pk	3000 K	72.00 lm/W	1,300 lm	Wide beam
929002322301	DL252 G2 R SQ LED 1300 40K 18W 8" WV 1pk	4000 K	72.00 lm/W	1,300 lm	Wide beam
929002322401	DL252 G2 R SQ LED 1300 65K 18W 8" WV 1pk	6500 K	72.00 lm/W	1,300 lm	Wide beam
929002322801	DL252 G2 R SQ LED 900 30K 12W 6" WV 1pk	3000 K	75.00 lm/W	900 lm	Wide beam
929002322901	DL252 G2 R SQ LED 900 40K 12W 6" WV 1pk	4000 K	75.00 lm/W	900 lm	Wide beam
929002323001	DL252 G2 R SQ LED 900 65K 12W 6" WV 1pk	6500 K	75.00 lm/W	900 lm	Wide beam
929002345701	DL252 G2 R SQ LED 400 30K 6W 4" WV	3000 K	66.00 lm/W	400 lm	Beam angle 110°
929002345801	DL252 G2 R SQ LED 400 40K 6W 4" WV	4000 K	66.00 lm/W	400 lm	Beam angle 110°
929002345901	DL252 G2 R SQ LED 400 65K 6W 4" WV	6500 K	66.00 lm/W	400 lm	Beam angle 110°
929002346301	DL252 G2 R SQ LED 2000 30K 24W 11" WV	3000 K	79.00 lm/W	2,000 lm	Beam angle 110°
929002346401	DL252 G2 R SQ LED 2000 40K 24W 11" WV	4000 K	83.00 lm/W	2,000 lm	Beam angle 110°
929002346501	DL252 G2 R SQ LED 2000 65K 24W 11" WV	6500 K	83.00 lm/W	2,000 lm	Beam angle 110°

Operating and Electrical

Order Code	Full Product Name	Power Consumption	Suitable for random switching
929002636101	DL252 G2 SF RD LED 2000 30K 24W 11" WV	24 W	No
929002636201	DL252 G2 SF RD LED 2000 40K 24W 11" WV	24 W	No
929002636301	DL252 G2 SF RD LED 2000 65K 24W 11" WV	24 W	No
929002635201	DL252 G2 SF SQ LED 900 30K 12W 6" WV	12 W	No

Order Code	Full Product Name	Power Consumption	Suitable for random switching
929002635301	DL252 G2 SF SQ LED 900 40K 12W 6" WV	12 W	No
929002635401	DL252 G2 SF SQ LED 900 65K 12W 6" WV	12 W	No
929002635801	DL252 G2 SF SQ LED 1300 30K 18W 8" WV	18 W	No
929002635901	DL252 G2 SF SQ LED 1300 40K 18W 8" WV	18 W	No

External Slim Downlight DL252

Order Code	Full Product Name	Power Consumption	Suitable for random switching
929002636001	DL252 G2 SF SQ LED 1300 65K 18W 8" WV	18 W	No
929002636401	DL252 G2 SF SQ LED 2000 30K 24W 11" WV	24 W	No
929002636501	DL252 G2 SF SQ LED 2000 40K 24W 11" WV	24 W	No
929002636601	DL252 G2 SF SQ LED 2000 65K 24W 11" WV	24 W	No
929002321901	DL252 G2 R Rd LED 1300 30K 18W 8" WV 1pk	18 W	No
929002322001	DL252 G2 R Rd LED 1300 40K 18W 8" WV 1pk	18 W	No
929002322101	DL252 G2 R Rd LED 1300 65K 18W 8" WV 1pk	18 W	No
929002322501	DL252 G2 R Rd LED 900 30K 12W 6" WV 1pk	12 W	No
929002322601	DL252 G2 R Rd LED 900 40K 12W 6" WV 1pk	12 W	No
929002322701	DL252 G2 R Rd LED 900 65K 12W 6" WV 1pk	12 W	No
929002345401	DL252 G2 R Rd LED 400 30K 6W 4" WV	6 W	Not applicable
929002345501	DL252 G2 R Rd LED 400 40K 6W 4" WV	6 W	Not applicable
929002345601	DL252 G2 R Rd LED 400 65K 6W 4" WV	6 W	Not applicable
929002346001	DL252 G2 R Rd LED 2000 30K 24W 11" WV	24 W	Not applicable
929002346101	DL252 G2 R Rd LED 2000 40K 24W 11" WV	24 W	Not applicable
929002346201	DL252 G2 R Rd LED 2000 65K 24W 11" WV	24 W	Not applicable
929002634901	DL252 G2 SF RD LED 900 30K 12W 6" WV	12 W	No
929002635001	DL252 G2 SF RD LED 900 40K 12W 6" WV	12 W	No
929002635101	DL252 G2 SF RD LED 900 65K 12W 6" WV	12 W	No
929002635501	DL252 G2 SF RD LED 1300 30K 18W 8" WV	18 W	No
929002635601	DL252 G2 SF RD LED 1300 40K 18W 8" WV	18 W	No
929002635701	DL252 G2 SF RD LED 1300 65K 18W 8" WV	18 W	No
929002322201	DL252 G2 R SQ LED 1300 30K 18W 8" WV 1pk	18 W	No
929002322301	DL252 G2 R SQ LED 1300 40K 18W 8" WV 1pk	18 W	No
929002322401	DL252 G2 R SQ LED 1300 65K 18W 8" WV 1pk	18 W	No
929002322801	DL252 G2 R SQ LED 900 30K 12W 6" WV 1pk	12 W	No
929002322901	DL252 G2 R SQ LED 900 40K 12W 6" WV 1pk	12 W	No
929002323001	DL252 G2 R SQ LED 900 65K 12W 6" WV 1pk	12 W	No
929002345701	DL252 G2 R SQ LED 400 30K 6W 4" WV	6 W	Not applicable
929002345801	DL252 G2 R SQ LED 400 40K 6W 4" WV	6 W	Not applicable
929002345901	DL252 G2 R SQ LED 400 65K 6W 4" WV	6 W	Not applicable
929002346301	DL252 G2 R SQ LED 2000 30K 24W 11" WV	24 W	Not applicable
929002346401	DL252 G2 R SQ LED 2000 40K 24W 11" WV	24 W	Not applicable
929002346501	DL252 G2 R SQ LED 2000 65K 24W 11" WV	24 W	Not applicable

Mechanical and Housing

Order Code	Full Product Name	Mech. impact protection code
929002636101	DL252 G2 SF RD LED 2000 30K 24W 11" WV	IK01
929002636201	DL252 G2 SF RD LED 2000 40K 24W 11" WV	IK01
929002636301	DL252 G2 SF RD LED 2000 65K 24W 11" WV	IK01
929002635201	DL252 G2 SF SQ LED 900 30K 12W 6" WV	IK01
929002635301	DL252 G2 SF SQ LED 900 40K 12W 6" WV	IK01
929002635401	DL252 G2 SF SQ LED 900 65K 12W 6" WV	IK01
929002635801	DL252 G2 SF SQ LED 1300 30K 18W 8" WV	IK01
929002635901	DL252 G2 SF SQ LED 1300 40K 18W 8" WV	IK01
929002636001	DL252 G2 SF SQ LED 1300 65K 18W 8" WV	IK01
929002636401	DL252 G2 SF SQ LED 2000 30K 24W 11" WV	IK01
929002636501	DL252 G2 SF SQ LED 2000 40K 24W 11" WV	IK01
929002636601	DL252 G2 SF SQ LED 2000 65K 24W 11" WV	IK01
929002321901	DL252 G2 R Rd LED 1300 30K 18W 8" WV 1pk	IK01
929002322001	DL252 G2 R Rd LED 1300 40K 18W 8" WV 1pk	IK01
929002322101	DL252 G2 R Rd LED 1300 65K 18W 8" WV 1pk	IK01
929002322501	DL252 G2 R Rd LED 900 30K 12W 6" WV 1pk	IK01
929002322601	DL252 G2 R Rd LED 900 40K 12W 6" WV 1pk	IK01
929002322701	DL252 G2 R Rd LED 900 65K 12W 6" WV 1pk	IK01
929002345401	DL252 G2 R Rd LED 400 30K 6W 4" WV	IK03
929002345501	DL252 G2 R Rd LED 400 40K 6W 4" WV	IK03
929002345601	DL252 G2 R Rd LED 400 65K 6W 4" WV	IK03
929002346001	DL252 G2 R Rd LED 2000 30K 24W 11" WV	IK03

External Slim Downlight DL252

Order Code	Full Product Name	Mech. impact protection code
929002346101	DL252 G2 R Rd LED 2000 40K 24W 11" WV	IK03
929002346201	DL252 G2 R Rd LED 2000 65K 24W 11" WV	IK03
929002634901	DL252 G2 SF RD LED 900 30K 12W 6" WV	IK01
929002635001	DL252 G2 SF RD LED 900 40K 12W 6" WV	IK01
929002635101	DL252 G2 SF RD LED 900 65K 12W 6" WV	IK01
929002635501	DL252 G2 SF RD LED 1300 30K 18W 8" WV	IK01
929002635601	DL252 G2 SF RD LED 1300 40K 18W 8" WV	IK01
929002635701	DL252 G2 SF RD LED 1300 65K 18W 8" WV	IK01
929002322201	DL252 G2 R SQ LED 1300 30K 18W 8" WV 1pk	IK01
929002322301	DL252 G2 R SQ LED 1300 40K 18W 8" WV 1pk	IK01

Order Code	Full Product Name	Mech. impact protection code
929002322401	DL252 G2 R SQ LED 1300 65K 18W 8" WV 1pk	IK01
929002322801	DL252 G2 R SQ LED 900 30K 12W 6" WV 1pk	IK01
929002322901	DL252 G2 R SQ LED 900 40K 12W 6" WV 1pk	IK01
929002323001	DL252 G2 R SQ LED 900 65K 12W 6" WV 1pk	IK01
929002345701	DL252 G2 R SQ LED 400 30K 6W 4" WV	IK03
929002345801	DL252 G2 R SQ LED 400 40K 6W 4" WV	IK03
929002345901	DL252 G2 R SQ LED 400 65K 6W 4" WV	IK03
929002346301	DL252 G2 R SQ LED 2000 30K 24W 11" WV	IK03
929002346401	DL252 G2 R SQ LED 2000 40K 24W 11" WV	IK03
929002346501	DL252 G2 R SQ LED 2000 65K 24W 11" WV	IK03

Approval and Application

Order Code	Full Product Name	Ambient temperature range
929002636101	DL252 G2 SF RD LED 2000 30K 24W 11" WV	-20 to +40 °C
929002636201	DL252 G2 SF RD LED 2000 40K 24W 11" WV	-20 to +40 °C
929002636301	DL252 G2 SF RD LED 2000 65K 24W 11" WV	-20 to +40 °C
929002635201	DL252 G2 SF SQ LED 900 30K 12W 6" WV	-20 to +40 °C
929002635301	DL252 G2 SF SQ LED 900 40K 12W 6" WV	-20 to +40 °C
929002635401	DL252 G2 SF SQ LED 900 65K 12W 6" WV	-20 to +40 °C
929002635801	DL252 G2 SF SQ LED 1300 30K 18W 8" WV	-20 to +40 °C
929002635901	DL252 G2 SF SQ LED 1300 40K 18W 8" WV	-20 to +40 °C
929002636001	DL252 G2 SF SQ LED 1300 65K 18W 8" WV	-20 to +40 °C
929002636401	DL252 G2 SF SQ LED 2000 30K 24W 11" WV	-20 to +40 °C
929002636501	DL252 G2 SF SQ LED 2000 40K 24W 11" WV	-20 to +40 °C
929002636601	DL252 G2 SF SQ LED 2000 65K 24W 11" WV	-20 to +40 °C
929002321901	DL252 G2 R Rd LED 1300 30K 18W 8" WV 1pk	-20 to +40 °C
929002322001	DL252 G2 R Rd LED 1300 40K 18W 8" WV 1pk	-20 to +40 °C
929002322101	DL252 G2 R Rd LED 1300 65K 18W 8" WV 1pk	-20 to +40 °C
929002322501	DL252 G2 R Rd LED 900 30K 12W 6" WV 1pk	-20 to +40 °C
929002322601	DL252 G2 R Rd LED 900 40K 12W 6" WV 1pk	-20 to +40 °C
929002322701	DL252 G2 R Rd LED 900 65K 12W 6" WV 1pk	-20 to +40 °C

Order Code	Full Product Name	Ambient temperature range
929002345401	DL252 G2 R Rd LED 400 30K 6W 4" WV	-10 to +40 °C
929002345501	DL252 G2 R Rd LED 400 40K 6W 4" WV	-10 to +40 °C
929002345601	DL252 G2 R Rd LED 400 65K 6W 4" WV	-10 to +40 °C
929002346001	DL252 G2 R Rd LED 2000 30K 24W 11" WV	-10 to +40 °C
929002346101	DL252 G2 R Rd LED 2000 40K 24W 11" WV	-10 to +40 °C
929002346201	DL252 G2 R Rd LED 2000 65K 24W 11" WV	-10 to +40 °C
929002634901	DL252 G2 SF RD LED 900 30K 12W 6" WV	-20 to +40 °C
929002635001	DL252 G2 SF RD LED 900 40K 12W 6" WV	-20 to +40 °C
929002635101	DL252 G2 SF RD LED 900 65K 12W 6" WV	-20 to +40 °C
929002635501	DL252 G2 SF RD LED 1300 30K 18W 8" WV	-20 to +40 °C
929002635601	DL252 G2 SF RD LED 1300 40K 18W 8" WV	-20 to +40 °C
929002635701	DL252 G2 SF RD LED 1300 65K 18W 8" WV	-20 to +40 °C
929002322201	DL252 G2 R SQ LED 1300 30K 18W 8" WV 1pk	-20 to +40 °C
929002322301	DL252 G2 R SQ LED 1300 40K 18W 8" WV 1pk	-20 to +40 °C
929002322401	DL252 G2 R SQ LED 1300 65K 18W 8" WV 1pk	-20 to +40 °C
929002322801	DL252 G2 R SQ LED 900 30K 12W 6" WV 1pk	-20 to +40 °C
929002322901	DL252 G2 R SQ LED 900 40K 12W 6" WV 1pk	-20 to +40 °C
929002323001	DL252 G2 R SQ LED 900 65K 12W 6" WV 1pk	-20 to +40 °C
929002345701	DL252 G2 R SQ LED 400 30K 6W 4" WV	-10 to +40 °C
929002345801	DL252 G2 R SQ LED 400 40K 6W 4" WV	-10 to +40 °C
929002345901	DL252 G2 R SQ LED 400 65K 6W 4" WV	-10 to +40 °C
929002346301	DL252 G2 R SQ LED 2000 30K 24W 11" WV	-10 to +40 °C
929002346401	DL252 G2 R SQ LED 2000 40K 24W 11" WV	-10 to +40 °C
929002346501	DL252 G2 R SQ LED 2000 65K 24W 11" WV	-10 to +40 °C

Initial Performance (IEC Compliant)

External Slim Downlight DL252

Order Code	Full Product Name	Initial chromaticity	Luminous flux tolerance
929002636101	DL252 G2 SF RD LED 2000 30K 24W 11" WV	(0.440, 0.403) <6	+10%/-15%
929002636201	DL252 G2 SF RD LED 2000 40K 24W 11" WV	(0.380, 0.380) <6	+10%/-15%
929002636301	DL252 G2 SF RD LED 2000 65K 24W 11" WV	(0.313, 0.337) <6	+10%/-15%
929002635201	DL252 G2 SF SQ LED 900 30K 12W 6" WV	(0.440, 0.403) <6	+10%/-15%
929002635301	DL252 G2 SF SQ LED 900 40K 12W 6" WV	(0.380, 0.380) <6	+10%/-15%
929002635401	DL252 G2 SF SQ LED 900 65K 12W 6" WV	(0.313, 0.337) <6	+10%/-15%
929002635801	DL252 G2 SF SQ LED 1300 30K 18W 8" WV	(0.440, 0.403) <6	+10%/-15%
929002635901	DL252 G2 SF SQ LED 1300 40K 18W 8" WV	(0.380, 0.380) <6	+10%/-15%
929002636001	DL252 G2 SF SQ LED 1300 65K 18W 8" WV	(0.313, 0.337) <6	+10%/-15%
929002636401	DL252 G2 SF SQ LED 2000 30K 24W 11" WV	(0.440, 0.403) <6	+10%/-15%
929002636501	DL252 G2 SF SQ LED 2000 40K 24W 11" WV	(0.380, 0.380) <6	+10%/-15%
929002636601	DL252 G2 SF SQ LED 2000 65K 24W 11" WV	(0.313, 0.337) <6	+10%/-15%
929002321901	DL252 G2 R Rd LED 1300 30K 18W 8" WV 1pk	(0.440, 0.403) <6	+10%/-15%
929002322001	DL252 G2 R Rd LED 1300 40K 18W 8" WV 1pk	(0.380, 0.380) <6	+10%/-15%
929002322101	DL252 G2 R Rd LED 1300 65K 18W 8" WV 1pk	(0.313, 0.337) <6	+10%/-15%
929002322501	DL252 G2 R Rd LED 900 30K 12W 6" WV 1pk	(0.440, 0.403) <6	+10%/-15%
929002322601	DL252 G2 R Rd LED 900 40K 12W 6" WV 1pk	(0.380, 0.380) <6	+10%/-15%
929002322701	DL252 G2 R Rd LED 900 65K 12W 6" WV 1pk	(0.313, 0.337) <6	+10%/-15%
929002345401	DL252 G2 R Rd LED 400 30K 6W 4" WV	(0.4400 , , 0.4030) 6 SDCM	-
929002345501	DL252 G2 R Rd LED 400 40K 6W 4" WV	(0.3800 , , 0.3800) 6 SDCM	-
929002345601	DL252 G2 R Rd LED 400 65K 6W 4" WV	(0.3130 , , 0.3370) 6 SDCM	-
929002346001	DL252 G2 R Rd LED 2000 30K 24W 11" WV	(0.4400 , , 0.4030) 6 SDCM	-
929002346101	DL252 G2 R Rd LED 2000 40K 24W 11" WV	(0.3800 , , 0.3800) 6 SDCM	-
929002346201	DL252 G2 R Rd LED 2000 65K 24W 11" WV	(0.3130 , , 0.3370) 6 SDCM	-
929002634901	DL252 G2 SF RD LED 900 30K 12W 6" WV	(0.440, 0.403) <6	+10%/-15%
929002635001	DL252 G2 SF RD LED 900 40K 12W 6" WV	(0.380, 0.380) <6	+10%/-15%
929002635101	DL252 G2 SF RD LED 900 65K 12W 6" WV	(0.313, 0.337) <6	+10%/-15%
929002635501	DL252 G2 SF RD LED 1300 30K 18W 8" WV	(0.440, 0.403) <6	+10%/-15%
929002635601	DL252 G2 SF RD LED 1300 40K 18W 8" WV	(0.380, 0.380) <6	+10%/-15%
929002635701	DL252 G2 SF RD LED 1300 65K 18W 8" WV	(0.313, 0.337) <6	+10%/-15%
929002322201	DL252 G2 R SQ LED 1300 30K 18W 8" WV 1pk	(0.440, 0.403) <6	+10%/-15%
929002322301	DL252 G2 R SQ LED 1300 40K 18W 8" WV 1pk	(0.380, 0.380) <6	+10%/-15%
929002322401	DL252 G2 R SQ LED 1300 65K 18W 8" WV 1pk	(0.313, 0.337) <6	+10%/-15%
929002322801	DL252 G2 R SQ LED 900 30K 12W 6" WV 1pk	(0.440, 0.403) <6	+10%/-15%
929002322901	DL252 G2 R SQ LED 900 40K 12W 6" WV 1pk	(0.380, 0.380) <6	+10%/-15%
929002323001	DL252 G2 R SQ LED 900 65K 12W 6" WV 1pk	(0.313, 0.337) <6	+10%/-15%
929002345701	DL252 G2 R SQ LED 400 30K 6W 4" WV	(0.4400 , , 0.4030) 6 SDCM	-
929002345801	DL252 G2 R SQ LED 400 40K 6W 4" WV	(0.3800 , , 0.3800) 6 SDCM	-
929002345901	DL252 G2 R SQ LED 400 65K 6W 4" WV	(0.3130 , , 0.3370) 6 SDCM	-
929002346301	DL252 G2 R SQ LED 2000 30K 24W 11" WV	(0.4400 , , 0.4030) 6 SDCM	-
929002346401	DL252 G2 R SQ LED 2000 40K 24W 11" WV	(0.3800 , , 0.3800) 6 SDCM	-
929002346501	DL252 G2 R SQ LED 2000 65K 24W 11" WV	(0.3130 , , 0.3370) 6 SDCM	-

Over Time Performance (IEC Compliant)

Order Code	Full Product Name	Driver failure rate at 5000 h
929002636101	DL252 G2 SF RD LED 2000 30K 24W 11" WV	0.05 %
929002636201	DL252 G2 SF RD LED 2000 40K 24W 11" WV	0.05 %
929002636301	DL252 G2 SF RD LED 2000 65K 24W 11" WV	0.05 %
929002635201	DL252 G2 SF SQ LED 900 30K 12W 6" WV	0.05 %
929002635301	DL252 G2 SF SQ LED 900 40K 12W 6" WV	0.05 %
929002635401	DL252 G2 SF SQ LED 900 65K 12W 6" WV	0.05 %

External Slim Downlight DL252

Order Code	Full Product Name	Driver failure rate at 5000 h
929002635801	DL252 G2 SF SQ LED 1300 30K 18W 8" WV	0.05 %
929002635901	DL252 G2 SF SQ LED 1300 40K 18W 8" WV	0.05 %
929002636001	DL252 G2 SF SQ LED 1300 65K 18W 8" WV	0.05 %
929002636401	DL252 G2 SF SQ LED 2000 30K 24W 11" WV	0.05 %
929002636501	DL252 G2 SF SQ LED 2000 40K 24W 11" WV	0.05 %
929002636601	DL252 G2 SF SQ LED 2000 65K 24W 11" WV	0.05 %
929002321901	DL252 G2 R Rd LED 1300 30K 18W 8" WV 1pk	0.05 %
929002322001	DL252 G2 R Rd LED 1300 40K 18W 8" WV 1pk	0.05 %
929002322101	DL252 G2 R Rd LED 1300 65K 18W 8" WV 1pk	0.05 %
929002322501	DL252 G2 R Rd LED 900 30K 12W 6" WV 1pk	0.05 %
929002322601	DL252 G2 R Rd LED 900 40K 12W 6" WV 1pk	0.05 %
929002322701	DL252 G2 R Rd LED 900 65K 12W 6" WV 1pk	0.05 %
929002345401	DL252 G2 R Rd LED 400 30K 6W 4" WV	0.015 %
929002345501	DL252 G2 R Rd LED 400 40K 6W 4" WV	0.015 %
929002345601	DL252 G2 R Rd LED 400 65K 6W 4" WV	0.015 %
929002346001	DL252 G2 R Rd LED 2000 30K 24W 11" WV	0.015 %
929002346101	DL252 G2 R Rd LED 2000 40K 24W 11" WV	0.015 %
929002346201	DL252 G2 R Rd LED 2000 65K 24W 11" WV	0.015 %
929002634901	DL252 G2 SF RD LED 900 30K 12W 6" WV	0.05 %
929002635001	DL252 G2 SF RD LED 900 40K 12W 6" WV	0.05 %
929002635101	DL252 G2 SF RD LED 900 65K 12W 6" WV	0.05 %
929002635501	DL252 G2 SF RD LED 1300 30K 18W 8" WV	0.05 %
929002635601	DL252 G2 SF RD LED 1300 40K 18W 8" WV	0.05 %
929002635701	DL252 G2 SF RD LED 1300 65K 18W 8" WV	0.05 %
929002322201	DL252 G2 R SQ LED 1300 30K 18W 8" WV 1pk	0.05 %
929002322301	DL252 G2 R SQ LED 1300 40K 18W 8" WV 1pk	0.05 %
929002322401	DL252 G2 R SQ LED 1300 65K 18W 8" WV 1pk	0.05 %
929002322801	DL252 G2 R SQ LED 900 30K 12W 6" WV 1pk	0.05 %
929002322901	DL252 G2 R SQ LED 900 40K 12W 6" WV 1pk	0.05 %
929002323001	DL252 G2 R SQ LED 900 65K 12W 6" WV 1pk	0.05 %
929002345701	DL252 G2 R SQ LED 400 30K 6W 4" WV	0.015 %
929002345801	DL252 G2 R SQ LED 400 40K 6W 4" WV	0.015 %
929002345901	DL252 G2 R SQ LED 400 65K 6W 4" WV	0.015 %
929002346301	DL252 G2 R SQ LED 2000 30K 24W 11" WV	0.015 %
929002346401	DL252 G2 R SQ LED 2000 40K 24W 11" WV	0.015 %
929002346501	DL252 G2 R SQ LED 2000 65K 24W 11" WV	0.015 %

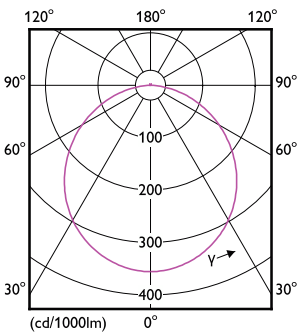

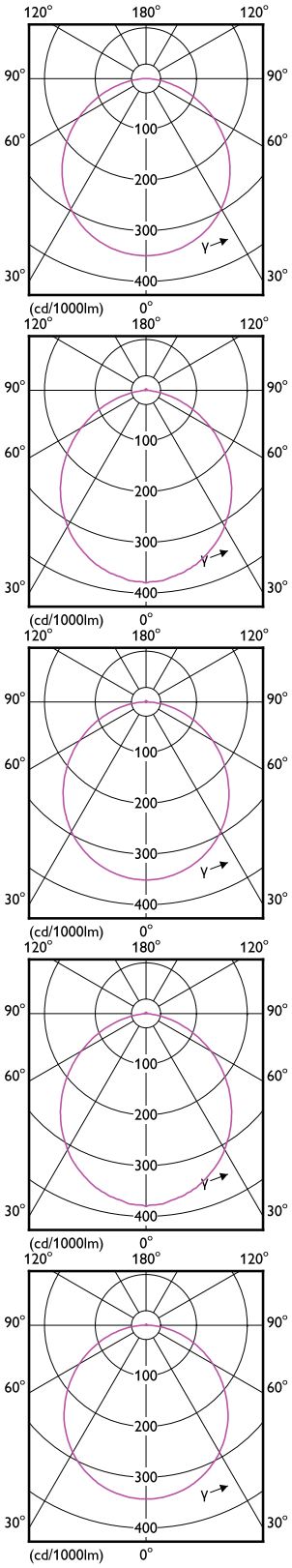

External Slim Downlight DL252

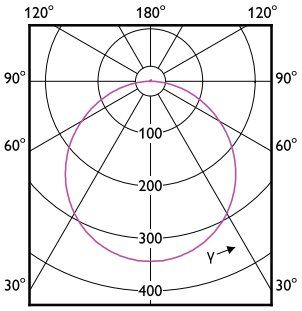

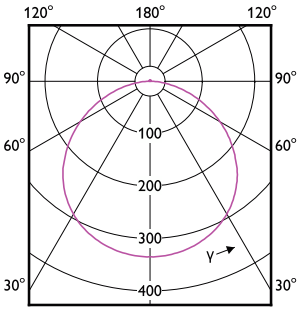

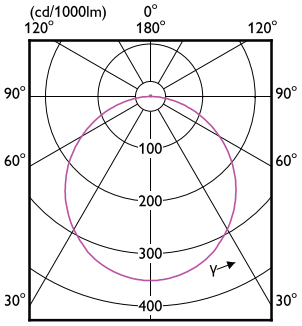

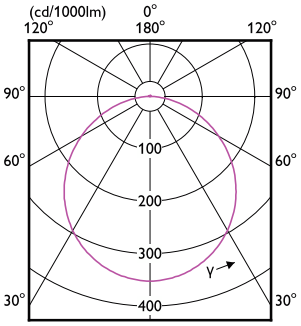

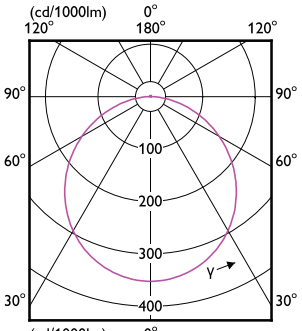

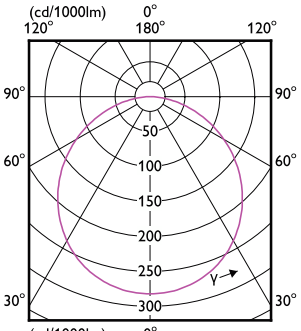

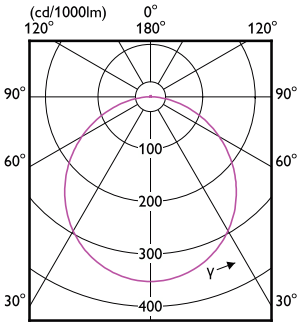

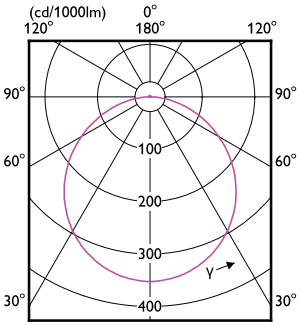

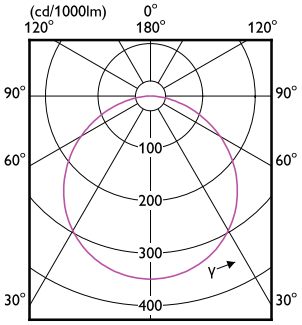

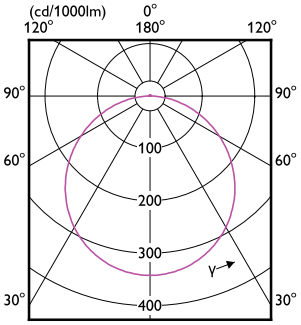

External Slim Downlight DL252

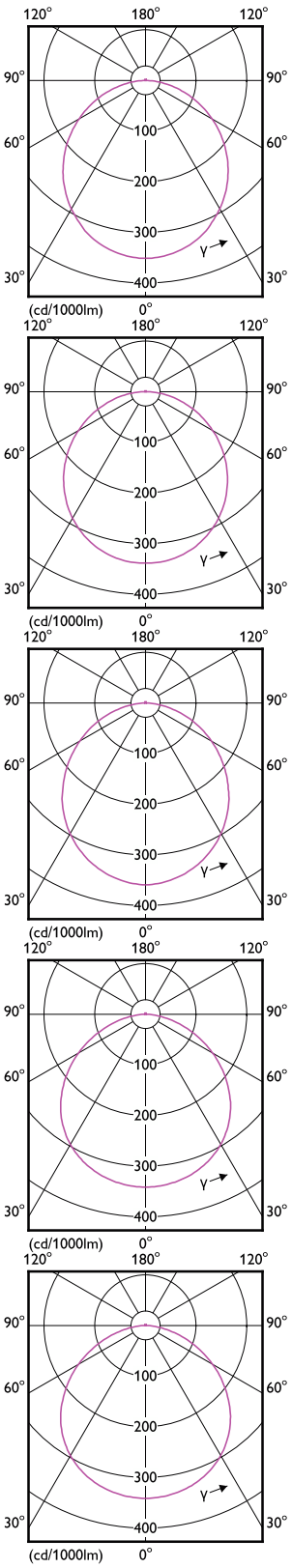

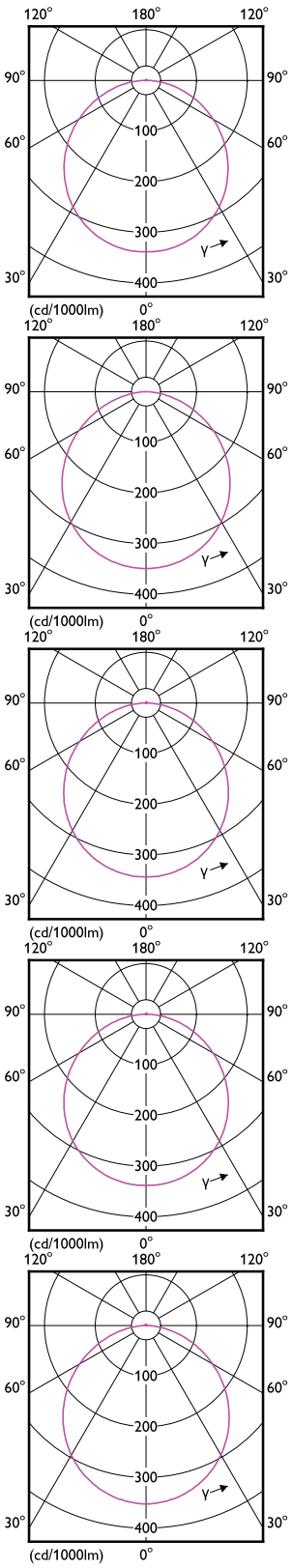

External Slim Downlight DL252

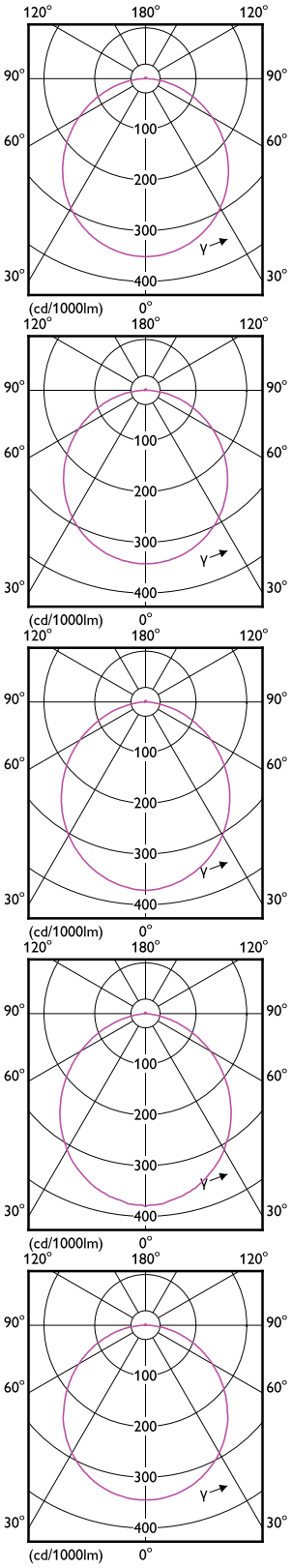

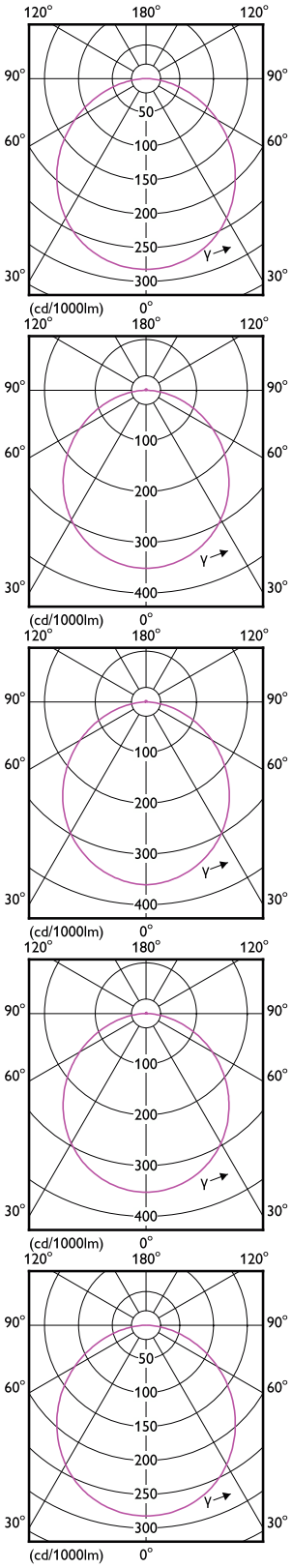

External Slim Downlight DL252

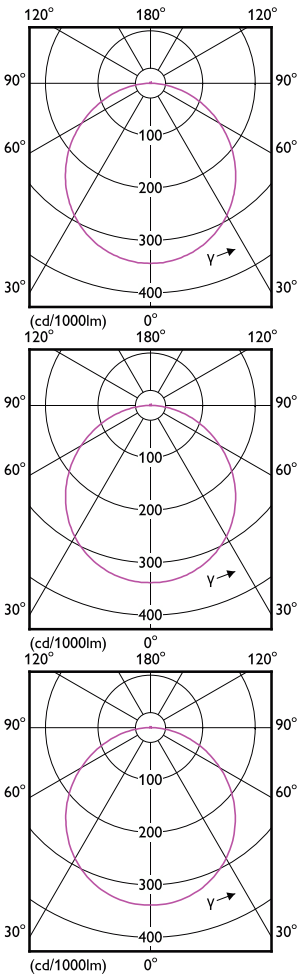

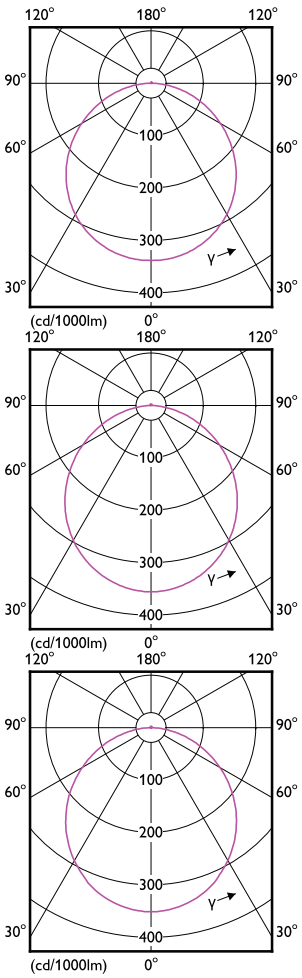

Beam Diagrams

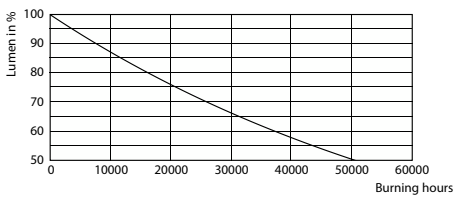

Beam diagram - DL252 G2 R SQ LED 1300 40K 18W 8" WV 1pk

External Slim Downlight DL252

© 2025 Signify Holding All rights reserved. Signify does not give any representation or warranty as to the accuracy or completeness of the information included herein and shall not be liable for any action in reliance thereon. The information presented in this document is not intended as any commercial offer and does not form part of any quotation or contract, unless otherwise agreed by Signify. All trademarks are owned by Signify Holding or their respective owners.