PHILIPS

**SP680X1 LED39S 6500 PSU WH L120 S1**

919515811497

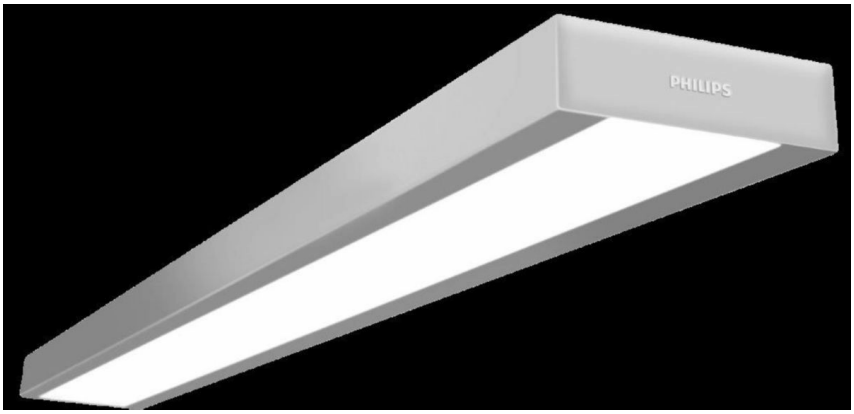


# Continuous slim suspended linear office Luminire: Performanc and Elegance

The PureLine family of luminaires gives you compromise-free office illumination. It is a perfect solution for office application and general indoor area lighting . The range brings together high-flux lighting with a homogeneous optical system without making any concessions on energy efficiency design.

## Warnings and Safety

- Meant for use in Indoor environment only

## General Information

| | |
|---|---|
| Driver included | Yes |
| Light source engine type | LED |
| Warranty period | 3 years |

## Light Technical

| | |
|---|---|
| Luminous Flux | 3,900 lm |
| Correlated Color Temperature (Nom) | 6500 K |
| Luminous Efficacy (rated) (Nom) | 100 lm/W |
| Color rendering index (CRI) | >80 |
| Beam angle of light source | 120 degree(s) |
| Light source color | 865 cool daylight |
| Optic type | - |
| Luminaire light beam spread | 120° |

## Operating and Electrical

| | |
|---|---|
| Input Voltage | 220-240 V |
| Line Frequency | 50 Hz |
| Power Consumption | 38 W |
| Power Factor (Fraction) | 0.9 |
| Protection class IEC | Safety class I |
| Surge Protection (Common/ Differential) | 2.5 kV kV |

## Controls and Dimming

| | |
|---|---|
| Dimmable | No |
| Control interface | - |

## Mechanical and Housing

| | |
|---|---|
| Housing Material | Aluminum extruded |
| Optic material | Polycarbonate |
| Optical cover material | Polycarbonate |
| Housing Color | White |
| Mounting device | Suspension set simple, standard |
| Overall length | 1,126 mm |
| Overall width | 150 mm |
| Overall height | 43 mm |
| Dimensions (Height x Width x Depth) | 43 x 150 x 1126 mm |
| Material | Aluminum |
| Ingress protection code | IP20 [Finger-protected] |
| Mech. impact protection code | IK02 [0.2 J standard] |
| Optical cover type | Polycarbonate |
| Net Weight (Piece) | 2.500 kg |

## Approval and Application

| | |
|---|---|
| Flammability mark | For mounting on normally flammable surfaces |
| Ambient temperature range | 0 to +45 °C |

## Dimensional drawing

Product : Pureline Suspended
Type : SP680
Application: Indoor

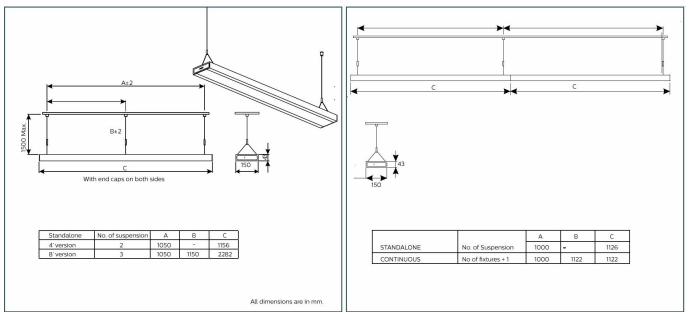


| Standalone | No. of suspension | A | B | C |
|---|---|---|---|---|
| A' version | 2 | 1050 | - | 1116 |
| B' version | 3 | 1050 | 1150 | 2282 |

| | No. of Suspension | A | B | C |
|---|---|---|---|---|
| STANDALONE | | 1000 | - | 1126 |
| CONTINUOUS | No of fixtures + 1 | 1000 | 1122 | 1122 |

## Initial Performance (IEC Compliant)

| | |
|---|---|
| Power consumption tolerance | +/-10% |

## Over Time Performance (IEC Compliant)

| | |
|---|---|
| Median useful life L70B50 | 50,000 hour(s) |

## Product Data

| | |
|---|---|
| Order product name | SP680X1 LED39S 6500 PSU WH L120 S1 |
| Full product name | SP680X1 LED39S 6500 PSU WH L120 S1 |
| Order code | 919515811497 |
| Material Nr. (12NC) | 919515811497 |
| Numerator - Quantity Per Pack | 1 |
| Numerator - Packs per outer box | 1 |

© 2026 Signify Holding. All rights reserved. The information provided herein is subject to change, without notice. Signify does not give any representation or warranty as to the accuracy or completeness of the information included herein and shall not be liable for any action in reliance thereon. The information presented in this document is not intended as any commercial offer and does not form part of any quotation or contract, unless otherwise agreed by Signify. Philips and the Philips Shield Emblem are registered trademarks of Koninklijke Philips N.V.