

SmartBright LED Downlight – perfect green light

SmartBright LED Downlight

When switching from conventional CFL to LED lighting, most customers want a green solution with an attractive total cost of ownership. SmartBright LED Downlight is characterized by low cost and high efficiency, providing the end-user with the perfect green light fixture.

Benefits

- Cost-effective
- 60% energy saving compared with CFL
- Simple yet elegant design

Features

- System efficiency > 85 lm/W
- Good color consistency, ensuring visual comfort
- Safe and stable

Application

- Shops
- Public areas

Dimensional drawing

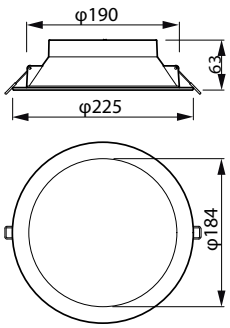

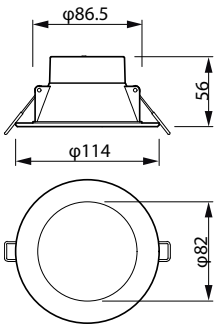

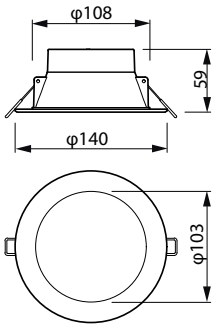

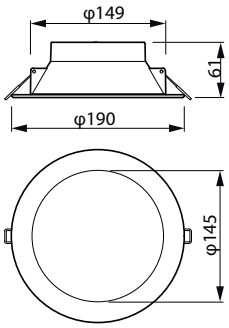

SmartBright LED Downlight

General Information	
Driver included	Yes
Light source replaceable	No
Number of gear units	1 unit
Light Technical	
Color rendering index (CRI)	80
Optic type	Beam angle 100°
Operating and Electrical	
Protection class IEC	Safety class II
Input Voltage	220 to 240 V
Line Frequency	50 or 60 Hz
Suitable for random switching	Not applicable
Controls and Dimming	
Dimmable	Yes
Maximum dim level	10% (depends on dimmer, ELV)
Mechanical and Housing	
Housing Color	White
Mech. impact protection code	IK03
Ingress protection code	IP40/54
Approval and Application	
Ambient temperature range	-20 to +40 °C
Flammability mark	For mounting on normally flammable surfaces
Glow-wire test	Temperature 750 °C, duration 5 s

Light Technical

Order Code	Full Product Name	Correlated Color Temperature (Nom)	Luminous Efficacy (rated) (Nom)	Luminous Flux
929002576408	DN029B G2 LED8/CCT PSR-E D90 GM	3000 K	106 lm/W	800 lm
929002576508	DN029B G2 LED10/CCT PSR-E D120 GM	3000 K	111 lm/W	1,000 lm
929002576608	DN029B G2 LED12/CCT PSR-E D150 GM	3000 K	114 lm/W	1,200 lm
929002576708	DN029B G2 LED20/CCT PSR-E D200 GM	3000 K	111 lm/W	2,000 lm
929002576808	DN029B G2 LED8/840 PSR-E D90 GM	4000 K	106 lm/W	800 lm
929002590008	DN029B G2 LED8/865 PSR-E D90 GM	6500 K	106 lm/W	800 lm
929002590908	DN029B G2 LED8/830 PSR-E D90 GM	3000 K	106 lm/W	800 lm

Operating and Electrical

Order Code	Full Product Name	Power Consumption
929002576408	DN029B G2 LED8/CCT PSR-E D90 GM	7.5 W
929002576508	DN029B G2 LED10/CCT PSR-E D120 GM	9 W
929002576608	DN029B G2 LED12/CCT PSR-E D150 GM	10.5 W
929002576708	DN029B G2 LED20/CCT PSR-E D200 GM	18 W

Order Code	Full Product Name	Power Consumption
929002576808	DN029B G2 LED8/840 PSR-E D90 GM	7.5 W
929002590008	DN029B G2 LED8/865 PSR-E D90 GM	7.5 W
929002590908	DN029B G2 LED8/830 PSR-E D90 GM	7.5 W

Initial Performance (IEC Compliant)

Order Code	Full Product Name	Initial chromaticity	Luminous flux tolerance
929002576408	DN029B G2 LED8/CCT PSR-E D90 GM	(3000K@, 0.4400, 0.4030 ; 4000K@0.37600.3656 ; 6500K@0.31300.3370) 6	3000K: ±10%:4000K: -10% / +20%:6500K: -10% / +20%

Order Code	Full Product Name	Initial chromaticity	Luminous flux tolerance
929002576508	DN029B G2 LED10/CCT PSR-E D120 GM	(3000K@, 0.4400, 0.4030 ; 4000K@0.37600.3656 ; 6500K@0.31300.3370) 6	3000K: ±10%:4000K: -10% / +20%:6500K: -10% / +20%

SmartBright LED Downlight

Order Code	Full Product Name	Initial chromaticity	Luminous flux tolerance
929002576608	DN029B G2 LED12/CCT PSR-E D150 GM	(3000K@, 0.4400, 0.4030 ; 4000K@0.37600.3656 ; 6500K@0.31300.3370) 6	3000K: ±10%:4000K: -10% / +20%:6500K: -10% / +20%
929002576708	DN029B G2 LED20/CCT PSR-E D200 GM	(3000K@, 0.4400, 0.4030 ; 4000K@0.37600.3656 ; 6500K@0.31300.3370) 6	3000K: ±10%:4000K: -10% / +20%:6500K: -10% / +20%
929002576808	DN029B G2 LED8/840 PSR-E D90 GM	(4000K@, 0.3800, 0.3800) 6	-10% / +20%
929002590008	DN029B G2 LED8/865 PSR-E D90 GM	(6500K@, 0.3130, 0.3370) 6	-10% / +20%
929002590908	DN029B G2 LED8/830 PSR-E D90 GM	(3000K@, 0.4400, 0.4030) 6	+/-10%

Over Time Performance (IEC Compliant)

Order Code	Full Product Name	Driver failure rate at 5000 h
929002576408	DN029B G2 LED8/CCT PSR-E D90 GM	1.2 %
929002576508	DN029B G2 LED10/CCT PSR-E D120 GM	1.2 %
929002576608	DN029B G2 LED12/CCT PSR-E D150 GM	1.2 %
929002576708	DN029B G2 LED20/CCT PSR-E D200 GM	1.2 %
929002576808	DN029B G2 LED8/840 PSR-E D90 GM	1.6 %
929002590008	DN029B G2 LED8/865 PSR-E D90 GM	1.6 %
929002590908	DN029B G2 LED8/830 PSR-E D90 GM	1.6 %

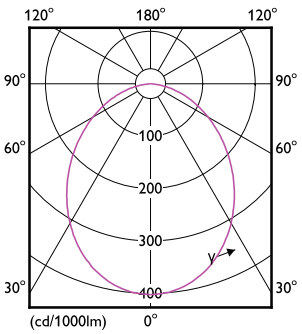

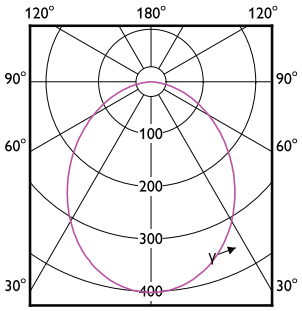

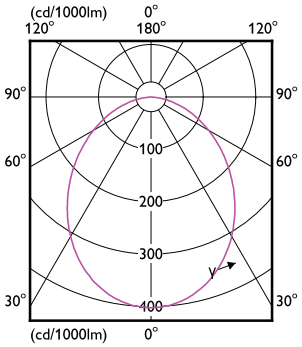

© 2025 Signify Holding All rights reserved. Signify does not give any representation or warranty as to the accuracy or completeness of the information included herein and shall not be liable for any action in reliance thereon. The information presented in this document is not intended as any commercial offer and does not form part of any quotation or contract, unless otherwise agreed by Signify. All trademarks are owned by Signify Holding or their respective owners.