PHILIPS

TL-E Circular Standard Colours

TLESTDC



Circular shaped, basic fluorescent lighting

This circular TL lamp (tube diameter 29 mm) enables omni-directional light distribution. It is suitable for use in a wide range of luminaires for various purposes where color rendering is not important.

Benefits

- Create atmospheres from warm white to cool daylight
- Symmetrical, omnidirectional light distribution

Applications

- Suitable for use in a wide range of luminaires for various purposes, including many decorative luminaires where color rendering is not important

Features

- Standard colors with moderate color rendering and varying color designations
- A lamp breaking is extremely unlikely to have any impact on your health. If a lamp breaks, ventilate the room for 30 minutes and remove the parts, preferably with gloves. Put them in a sealed plastic bag and take it to your local waste facilities for recycling. Do not use a vacuum cleaner.

Versions



LPPR TL-ESTD G10q

Dimensional drawing

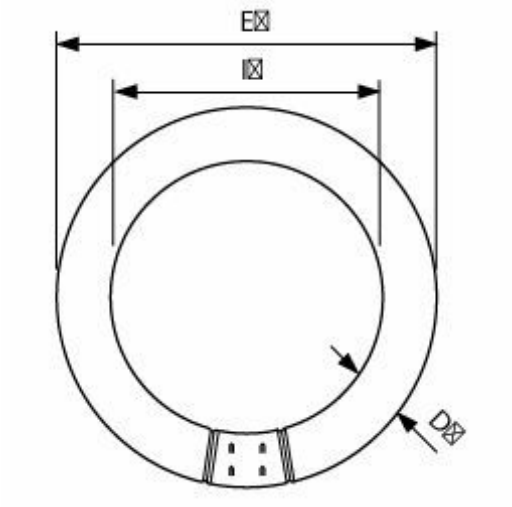

Product	D (max)	D (min)	E (min)	E (max)	I (min)	I (max)
TL-E 22W/54-765 1CT/12	30.9 mm	26.2 mm	205.0 mm	213.5 mm	149.1 mm	155.6 mm
TL-E 32W/54-765 1CT/12	30.9 mm	27.1 mm	299.0 mm	303.5 mm	241.0 mm	246.0 mm

General Information

Cap-Base	G10q

Light Technical

Color Designation	Cool Daylight
Correlated Color Temperature (Nom)	6200 K
Color rendering index (CRI)	72

Controls and Dimming

Dimmable	Yes

Mechanical and Housing

Bulb Shape	C-T29

Approval and Application

Mercury (Hg) Content (Nom)	9 mg

Light Technical

Order Code	Full Product Name	Luminous Flux	Luminous Efficacy (rated) (Nom)
928026205460	TL-E 22W/54-765 1CT/12	1,050 lm	48 lm/W
928026305460	TL-E 32W/54-765 1CT/12	1,750 lm	57 lm/W

Operating and Electrical

Order Code	Full Product Name	Power Consumption	Lamp Current (Nom)	Voltage (Nom)
928026205460	TL-E 22W/54-765 1CT/12	22.0 W	0.400 A	62 V
928026305460	TL-E 32W/54-765 1CT/12	32.0 W	0.450 A	81 V

© 2026 Signify Holding. All rights reserved. The information provided herein is subject to change, without notice. Signify does not give any representation or warranty as to the accuracy or completeness of the information included herein and shall not be liable for any action in reliance thereon. The information presented in this document is not intended as any commercial offer and does not form part of any quotation or contract, unless otherwise agreed by Signify. Philips and the Philips Shield Emblem are registered trademarks of Koninklijke Philips N.V.