PHILIPS

GreenUp deep recessed downlight G2

DN035B



GreenUp deep recessed downlight G2: The most affordable deep recessed downlight

The GreenUp deep recessed downlight G2 line offers a selection of popular LED luminaires that not only capture the trend of deep recessed but also come with high levels of Philips quality at a competitive price. Reliable, energy-efficient and affordable—just what you need.

Benefits

- Philips quality and reliability
- Energy-efficient
- Comfortable, diffused light

Applications

- Offices
- Corridors
- Rest rooms

Features

- 100–110 lm/W
- Deep recessed design
- Multiple sizes and light levels available
- Multiple color temperatures available

Versions



GreenUp deep recessed downlight G2



GreenUp deep recessed downlight G2



GreenUp deep recessed downlight G2



GreenUp deep recessed downlight G2

Dimensional drawing

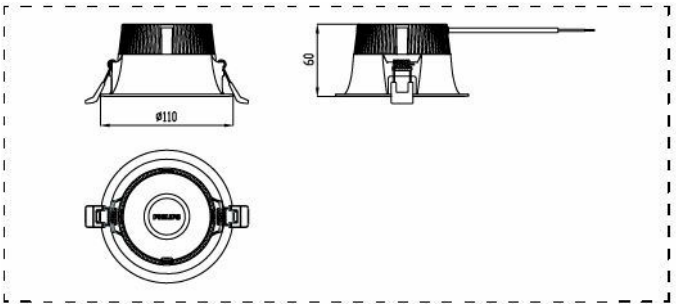

DN035B D100 LED10/840 PSU WH G2

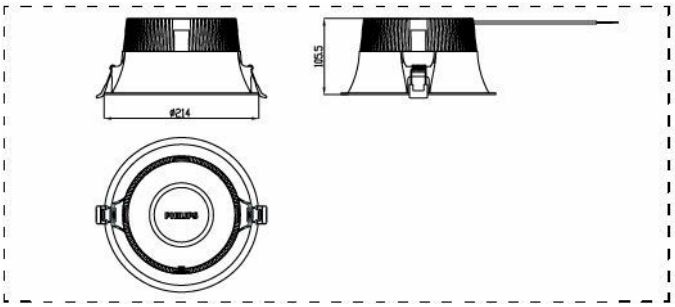

DN035B D200 LED22/840 PSU WH G2

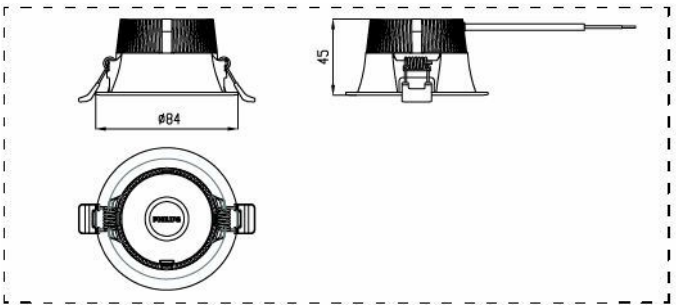

DN035B D75 LED6/865 PSU WH G2

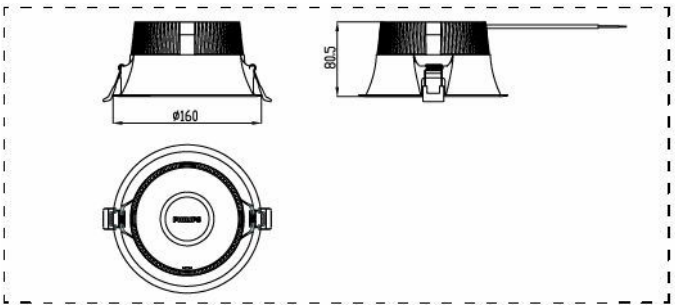

DN035B D150 LED20/865 PSU WH G2

General Information

Driver included	Yes

Light Technical

Color rendering index (CRI)	80

Operating and Electrical

Input Voltage	220 to 240 V
Line Frequency	50 or 60 Hz
Protection class IEC	Safety class II

Controls and Dimming

Dimmable	No

Mechanical and Housing

Housing Color	Black
Ingress protection code	IP20 [Finger-protected]
Mech. impact protection code	IK03 [0.3 J]
Optical cover type	Polycarbonate Diffuser

Approval and Application

CE mark	Yes
Ambient temperature range	-20 to +40 °C

Initial Performance (IEC Compliant)

Luminous flux tolerance	-10% / +20%

Light Technical

Order Code	Full Product Name	Luminous Flux	Correlated Color Temperature (Nom)	Luminous Efficacy (rated) (Nom)
911401565143	DN035B D200 LED22/830 PSU WH G2	1,980 lm	3000 K	99 lm/W
911401565243	DN035B D200 LED22/840 PSU WH G2	2,200 lm	4000 K	110 lm/W
911401565343	DN035B D200 LED22/865 PSU WH G2	2,200 lm	6500 K	110 lm/W
911401565443	DN035B D200 LED32/830 PSU WH G2	2,880 lm	3000 K	99 lm/W
911401565543	DN035B D200 LED32/840 PSU WH G2	3,200 lm	4000 K	110 lm/W
911401565643	DN035B D200 LED32/865 PSU WH G2	3,200 lm	6500 K	110 lm/W
911401563643	DN035B D75 LED6/830 PSU WH G2	540 lm	3000 K	90 lm/W
911401563743	DN035B D75 LED6/840 PSU WH G2	600 lm	4000 K	100 lm/W
911401563843	DN035B D75 LED6/865 PSU WH G2	600 lm	6500 K	100 lm/W
911401563943	DN035B D100 LED6/830 PSU WH G2	558 lm	3000 K	90 lm/W
911401564043	DN035B D100 LED6/840 PSU WH G2	620 lm	4000 K	100 lm/W
911401564143	DN035B D100 LED6/865 PSU WH G2	620 lm	6500 K	100 lm/W
911401564243	DN035B D100 LED10/830 PSU WH G2	855 lm	3000 K	99 lm/W
911401564343	DN035B D100 LED10/840 PSU WH G2	950 lm	4000 K	110 lm/W
911401564443	DN035B D100 LED10/865 PSU WH G2	950 lm	6500 K	110 lm/W

Order Code	Full Product Name	Luminous Flux	Correlated Color Temperature (Nom)	Luminous Efficacy (rated) (Nom)
911401564543	DN035B D150 LED16/830 PSU WH G2	1,440 lm	3000 K	99 lm/W
911401564643	DN035B D150 LED16/840 PSU WH G2	1,600 lm	4000 K	110 lm/W
911401564743	DN035B D150 LED16/865 PSU WH G2	1,600 lm	6500 K	110 lm/W
911401564843	DN035B D150 LED20/830 PSU WH G2	1,800 lm	3000 K	99 lm/W
911401564943	DN035B D150 LED20/840 PSU WH G2	2,000 lm	4000 K	110 lm/W
911401565043	DN035B D150 LED20/865 PSU WH G2	2,000 lm	6500 K	110 lm/W

Operating and Electrical

Order Code	Full Product Name	Power Consumption
911401565143	DN035B D200 LED22/830 PSU WH G2	18 W
911401565243	DN035B D200 LED22/840 PSU WH G2	18 W
911401565343	DN035B D200 LED22/865 PSU WH G2	18 W
911401565443	DN035B D200 LED32/830 PSU WH G2	26 W
911401565543	DN035B D200 LED32/840 PSU WH G2	26 W
911401565643	DN035B D200 LED32/865 PSU WH G2	26 W
911401563643	DN035B D75 LED6/830 PSU WH G2	5.5 W
911401563743	DN035B D75 LED6/840 PSU WH G2	5.5 W
911401563843	DN035B D75 LED6/865 PSU WH G2	5.5 W
911401563943	DN035B D100 LED6/830 PSU WH G2	6 W
911401564043	DN035B D100 LED6/840 PSU WH G2	6 W
911401564143	DN035B D100 LED6/865 PSU WH G2	6 W
911401564243	DN035B D100 LED10/830 PSU WH G2	8.5 W
911401564343	DN035B D100 LED10/840 PSU WH G2	8.5 W
911401564443	DN035B D100 LED10/865 PSU WH G2	8.5 W
911401564543	DN035B D150 LED16/830 PSU WH G2	13 W
911401564643	DN035B D150 LED16/840 PSU WH G2	13 W
911401564743	DN035B D150 LED16/865 PSU WH G2	13 W
911401564843	DN035B D150 LED20/830 PSU WH G2	16.5 W
911401564943	DN035B D150 LED20/840 PSU WH G2	16.5 W
911401565043	DN035B D150 LED20/865 PSU WH G2	16.5 W

© 2026 Signify Holding. All rights reserved. The information provided herein is subject to change, without notice. Signify does not give any representation or warranty as to the accuracy or completeness of the information included herein and shall not be liable for any action in reliance thereon. The information presented in this document is not intended as any commercial offer and does not form part of any quotation or contract, unless otherwise agreed by Signify. Philips and the Philips Shield Emblem are registered trademarks of Koninklijke Philips N.V.