PHILIPS

Lighting

Trusted performance, everyday.

SmartBright Dual Select Direct-lit panel

The new Philips SmartBright Direct-lit Panel offers an excellent value, tri-colour/ Lumen lighting solution. Available in three sizes to suit a wide variety of standard applications, the new range is light, reliable and easy to install. The panel's brand new direct-lit design creates a brighter and healthier office environment rendering true and vibrant colours.

Benefits

- Tri-color selectable
- 50K hours life
- 5 year warranty

Features

- Three colour temperature and three lumen choices in one device suiting multiple application environments
- Select lumen and colour temperature in an easy way
- Excellent colour rendering capability – CRI 80+
- Pre-wired with 1.5m cable and plug
- Driver quick connector ensures fast and easy installation
- Available in three standard sizes – 600 x 600mm, 300 x 1,200mm and 600 x 1,200mm

Application

- Office
- Retail

SmartBright Dual Select Direct-lit panel

Versions

SmartBright Dual Select Direct-lit panel

SmartBright Dual Select Direct-lit panel

Dimensional drawing

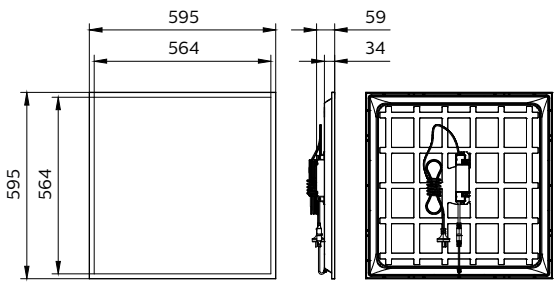

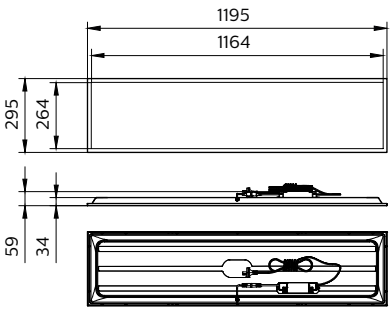

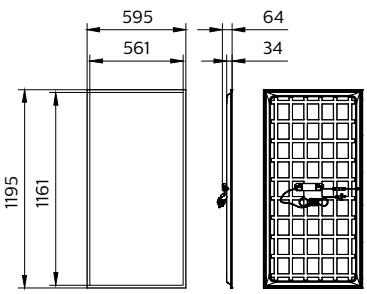

Product details

SmartBright Dual Select Direct-lit panel



SmartBright Dual Select Direct-lit panel



SmartBright Dual Select Direct-lit panel

Product details



SmartBright Dual Select Direct-lit panel



SmartBright Dual Select Direct-lit panel

General Information	
Driver included	Yes
Gear	-
Number of gear units	1 unit
Light Technical	
Beam angle of light source	120 degree(s)
Optic type	Beam angle 120°
Operating and Electrical	
Protection class IEC	Safety class II
Line Frequency	50 or 60 Hz
Controls and Dimming	
Dimmable	No
Maximum dim level	Not applicable
Mechanical and Housing	
Housing Color	White RAL 9003
Mech. impact protection code	IK02
Ingress protection code	IP20
Approval and Application	
Ambient temperature range	-10 to +45 °C
CE mark	No
ENEC mark	-
Flammability mark	For mounting on normally flammable surfaces
Glow-wire test	Temperature 650 °C, duration 30 s
Initial Performance (IEC Compliant)	
Initial chromaticity	(0.38, 0.38) SDCM≤5

Light Technical

Order Code	Full Product Name	Correlated Color Temperature (Nom)	Color rendering index (CRI)	Luminous Efficacy (rated) (Nom)	Luminous Flux
911401809787	RC170B LED31_37_41/ SCCT PSU W60L60	4000 K	80	120 lm/W	3,100 lm
911401851287	RC170B LED31_37_41/ SCCT PSU W60L60 GM	Selectable	>80	120 lm/W	3,100 lm
911401809887	RC170B LED40_45_50/ SCCT PSU W60L120	4000 K	80	130 lm/W	4,000 lm
911401809687	RC170B LED31_37_41/ SCCT PSU W30L120	4000 K	80	120 lm/W	3,100 lm
911401851387	RC170B LED31_37_41/ SCCT PSU W30L120 GM	Selectable	>80	120 lm/W	3,100 lm

Operating and Electrical

SmartBright Dual Select Direct-lit panel

Order Code	Full Product Name	Input Voltage	Power Consumption	Suitable for random switching
911401809787	RC170B LED31_37_41/ SCCT PSU W60L60	220 to 240 V	26 W	Yes
911401851287	RC170B LED31_37_41/ SCCT PSU W60L60 GM	200 to 240 V	26 W	No
911401809887	RC170B LED40_45_50/ SCCT PSU W60L120	220 to 240 V	30 W	Yes

Order Code	Full Product Name	Input Voltage	Power Consumption	Suitable for random switching
911401809687	RC170B LED31_37_41/ SCCT PSU W30L120	220 to 240 V	26 W	Yes
911401851387	RC170B LED31_37_41/ SCCT PSU W30L120 GM	200 to 240 V	26 W	No

Mechanical and Housing

Order Code	Full Product Name	Optical cover type
911401809787	RC170B LED31_37_41/SCCT PSU W60L60	Opal
911401851287	RC170B LED31_37_41/SCCT PSU W60L60 GM	PS
911401809887	RC170B LED40_45_50/SCCT PSU W60L120	Opal

Order Code	Full Product Name	Optical cover type
911401809687	RC170B LED31_37_41/SCCT PSU W30L120	Opal
911401851387	RC170B LED31_37_41/SCCT PSU W30L120 GM	PS

Initial Performance (IEC Compliant)

Order Code	Full Product Name	Luminous flux tolerance
911401809787	RC170B LED31_37_41/SCCT PSU W60L60	-10% / +10%
911401851287	RC170B LED31_37_41/SCCT PSU W60L60 GM	-10%,+15%
911401809887	RC170B LED40_45_50/SCCT PSU W60L120	-10% / +10%

Order Code	Full Product Name	Luminous flux tolerance
911401809687	RC170B LED31_37_41/SCCT PSU W30L120	-10% / +10%
911401851387	RC170B LED31_37_41/SCCT PSU W30L120 GM	-10%,+15%

© 2025 Signify Holding All rights reserved. Signify does not give any representation or warranty as to the accuracy or completeness of the information included herein and shall not be liable for any action in reliance thereon. The information presented in this document is not intended as any commercial offer and does not form part of any quotation or contract, unless otherwise agreed by Signify. All trademarks are owned by Signify Holding or their respective owners.