PHILIPS

Lighting



An ideal solution for installers and customers who wish easy intallation, visual comfort and excellent quality

Latam Downlight

Latam Downlight offers excellent experience for the consumer, which includs eye comfort, reliable quality and outstanding performance. Also provide water proof and dip switch solutioins within this family. Providing integrated or seprate driver and plenty CCT choices.

Benefits

- Comfortable LED light that's easy on eyes
- Long lifetime
- Reliable & Outstanding Performance

Features

- EyeComfort
- Safe to use & Reliable Quality
- High lumen output

Application

- Retail
- Offices
- Hospitality

Latam Downlight

Versions



DL252-RD-Surface-Mount-20241125

DL252-RD-Recessed-20241125



SL052 SQ SPOT WH MV 20240705

Dimensional drawing

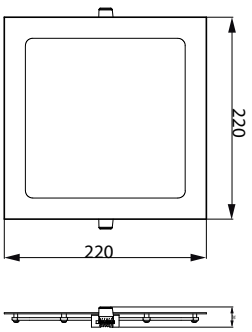

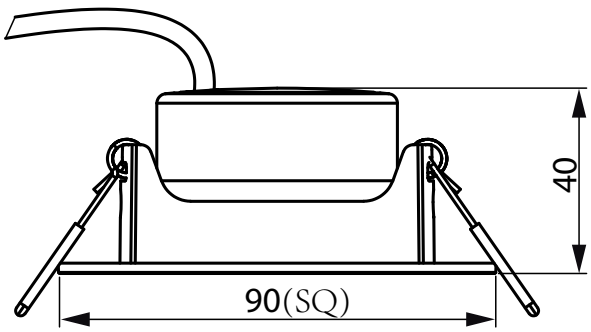

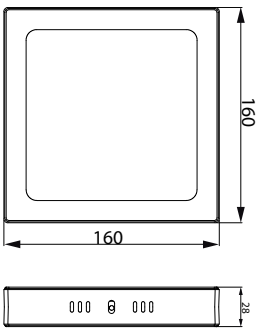

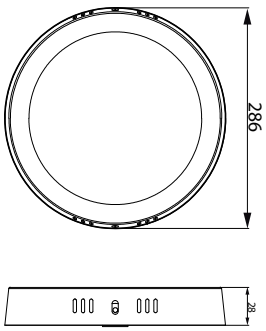

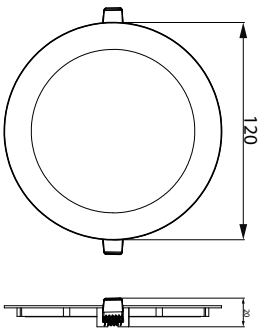

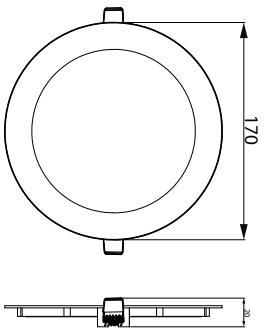

Latam Downlight

Dimensional drawing

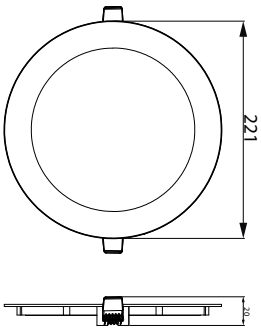

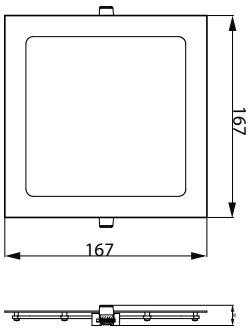

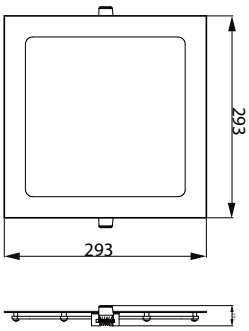

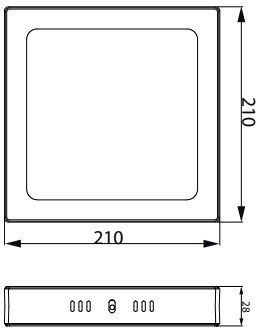

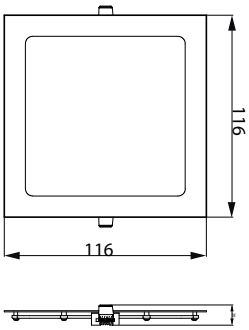

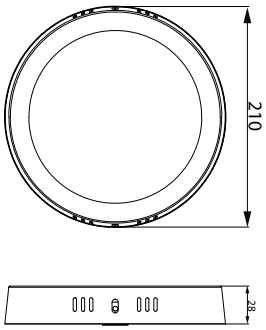

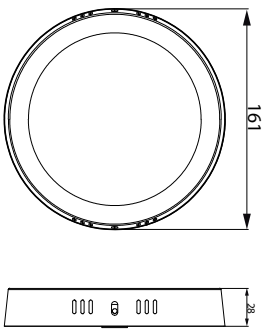

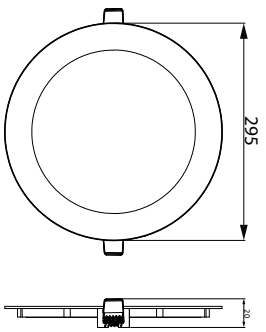

Latam Downlight

Dimensional drawing

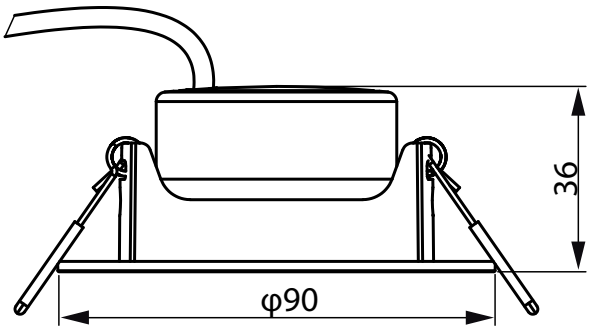

General Information	
Driver included	Yes
Light source replaceable	No
Number of gear units	1 unit
Light Technical	
Color rendering index (CRI)	80
Operating and Electrical	
Protection class IEC	Safety class II
Input Voltage	110 to 240 V
Suitable for random switching	No
Controls and Dimming	
Dimmable	No
Mechanical and Housing	
Housing Color	White
Ingress protection code	IP20
Approval and Application	
Ambient temperature range	-20 to +40 °C
Flammability mark	For mounting on normally flammable surfaces
Glow-wire test	Temperature 650 °C, duration 30 s

Light Technical (1/2)

Order Code	Full Product Name	Correlated Color Temperature (Nom)	Luminous Efficacy (rated) (Nom)	Luminous Flux	Number of light sources
929004655001	DL252 G2 SF RD 900 65K 12W 6" EMC	6500 K	75 lm/W	900 lm	1
929004655201	DL252 G2 SF RD 1300 40K 18W 8" EMC	4000 K	72 lm/W	1,300 lm	1
929004655301	DL252 G2 SF RD 1300 65K 18W 8" EMC	6500 K	72 lm/W	1,300 lm	1
929004655401	DL252 G2 SF RD 2000 65K 24W 11" EMC	6500 K	83 lm/W	2,000 lm	1
929004654101	DL252 G2 R SQ 400 30K 6W 4" EMC	3000 K	66 lm/W	400 lm	1
929004654201	DL252 G2 R SQ 400 65K 6W 4" EMC	6500 K	66 lm/W	400 lm	1
929004654301	DL252 G2 R SQ 900 30K 12W 6" EMC	3000 K	75 lm/W	900 lm	1
929004654401	DL252 G2 R SQ 900 65K 12W 6" EMC	6500 K	75 lm/W	900 lm	1
929004654501	DL252 G2 R SQ 1300 30K 18W 8" EMC	3000 K	72 lm/W	1,300 lm	1
929004654601	DL252 G2 R SQ 1300 65K 18W 8" EMC	6500 K	72 lm/W	1,300 lm	1
929004654701	DL252 G2 R SQ 2000 65K 24W 11" EMC	6500 K	83 lm/W	2,000 lm	1
929002654801	SL052 RD SPOT 070 4.2W 27K WH WV	2700 K	83 lm/W	350 lm	-
929002655001	SL052 RD SPOT 070 4.2W 65K WH WV	6500 K	90 lm/W	380 lm	-
929002655401	SL052 RD SPOT 070 6.2W 27K WH WV	2700 K	80 lm/W	500 lm	-
929002655601	SL052 RD SPOT 070 6.2W 65K WH WV	6500 K	88 lm/W	550 lm	-
929004653101	DL252 G2 R Rd 400 30K 6W 4" EMC	3000 K	66 lm/W	400 lm	1
929004653201	DL252 G2 R Rd 400 40K 6W 4" EMC	4000 K	66 lm/W	400 lm	1

Order Code	Full Product Name	Correlated Color Temperature (Nom)	Luminous Efficacy (rated) (Nom)	Luminous Flux	Number of light sources
929004653301	DL252 G2 R Rd 400 65K 6W 4" EMC	6500 K	66 lm/W	400 lm	1
929004653401	DL252 G2 R Rd 900 30K 12W 6" EMC	3000 K	75 lm/W	900 lm	1
929004653501	DL252 G2 R Rd 900 40K 12W 6" EMC	4000 K	75 lm/W	900 lm	1
929004653601	DL252 G2 R Rd 900 65K 12W 6" EMC	6500 K	75 lm/W	900 lm	1
929004653701	DL252 G2 R Rd 1300 30K 18W 8" EMC	3000 K	72 lm/W	1,300 lm	1
929004653801	DL252 G2 R Rd 1300 40K 18W 8" EMC	4000 K	72 lm/W	1,300 lm	1
929004653901	DL252 G2 R Rd 1300 65K 18W 8" EMC	6500 K	72 lm/W	1,300 lm	1
929004654001	DL252 G2 R Rd 2000 65K 24W 11" EMC	6500 K	83 lm/W	2,000 lm	1
929004655501	DL252 G2 SF SQ 900 65K 12W 6" EMC	6500 K	75 lm/W	900 lm	1
929004655601	DL252 G2 SF SQ 1300 65K 18W 8" EMC	6500 K	72 lm/W	1,300 lm	1
929002655101	SL052 SQ SPOT 070 4.2W 27K WH WV	2700 K	83 lm/W	350 lm	-
929002655301	SL052 SQ SPOT 070 4.2W 65K WH WV	6500 K	90 lm/W	380 lm	-
929002655701	SL052 SQ SPOT 070 6.2W 27K WH WV	2700 K	80 lm/W	500 lm	-
929002655901	SL052 SQ SPOT 070 6.2W 65K WH WV	6500 K	88 lm/W	550 lm	-

Light Technical (2/2)

Order Code	Full Product Name	Optic type
929004655001	DL252 G2 SF RD 900 65K 12W 6" EMC	Wide beam
929004655201	DL252 G2 SF RD 1300 40K 18W 8" EMC	Wide beam
929004655301	DL252 G2 SF RD 1300 65K 18W 8" EMC	Wide beam
929004655401	DL252 G2 SF RD 2000 65K 24W 11" EMC	Wide beam
929004654101	DL252 G2 R SQ 400 30K 6W 4" EMC	Wide beam
929004654201	DL252 G2 R SQ 400 65K 6W 4" EMC	Wide beam
929004654301	DL252 G2 R SQ 900 30K 12W 6" EMC	Wide beam
929004654401	DL252 G2 R SQ 900 65K 12W 6" EMC	Wide beam
929004654501	DL252 G2 R SQ 1300 30K 18W 8" EMC	Wide beam
929004654601	DL252 G2 R SQ 1300 65K 18W 8" EMC	Wide beam
929004654701	DL252 G2 R SQ 2000 65K 24W 11" EMC	Wide beam
929002654801	SL052 RD SPOT 070 4.2W 27K WH WV	Narrow beam
929002655001	SL052 RD SPOT 070 4.2W 65K WH WV	Narrow beam
929002655401	SL052 RD SPOT 070 6.2W 27K WH WV	Narrow beam
929002655601	SL052 RD SPOT 070 6.2W 65K WH WV	Narrow beam
929004653101	DL252 G2 R Rd 400 30K 6W 4" EMC	Wide beam

Order Code	Full Product Name	Optic type
929004653201	DL252 G2 R Rd 400 40K 6W 4" EMC	Wide beam
929004653301	DL252 G2 R Rd 400 65K 6W 4" EMC	Wide beam
929004653401	DL252 G2 R Rd 900 30K 12W 6" EMC	Wide beam
929004653501	DL252 G2 R Rd 900 40K 12W 6" EMC	Wide beam
929004653601	DL252 G2 R Rd 900 65K 12W 6" EMC	Wide beam
929004653701	DL252 G2 R Rd 1300 30K 18W 8" EMC	Wide beam
929004653801	DL252 G2 R Rd 1300 40K 18W 8" EMC	Wide beam
929004653901	DL252 G2 R Rd 1300 65K 18W 8" EMC	Wide beam
929004654001	DL252 G2 R Rd 2000 65K 24W 11" EMC	Wide beam
929004655501	DL252 G2 SF SQ 900 65K 12W 6" EMC	Wide beam
929004655601	DL252 G2 SF SQ 1300 65K 18W 8" EMC	Wide beam
929002655101	SL052 SQ SPOT 070 4.2W 27K WH WV	Narrow beam
929002655301	SL052 SQ SPOT 070 4.2W 65K WH WV	Narrow beam
929002655701	SL052 SQ SPOT 070 6.2W 27K WH WV	Narrow beam
929002655901	SL052 SQ SPOT 070 6.2W 65K WH WV	Narrow beam

Operating and Electrical

Latam Downlight

Order Code	Full Product Name	Line Frequency	Power Consumption
929004655001	DL252 G2 SF RD 900 65K 12W 6" EMC	-	12 W
929004655201	DL252 G2 SF RD 1300 40K 18W 8" EMC	-	18 W
929004655301	DL252 G2 SF RD 1300 65K 18W 8" EMC	-	18 W
929004655401	DL252 G2 SF RD 2000 65K 24W 11" EMC	-	24 W
929004654101	DL252 G2 R SQ 400 30K 6W 4" EMC	-	6 W
929004654201	DL252 G2 R SQ 400 65K 6W 4" EMC	-	6 W
929004654301	DL252 G2 R SQ 900 30K 12W 6" EMC	-	12 W
929004654401	DL252 G2 R SQ 900 65K 12W 6" EMC	-	12 W
929004654501	DL252 G2 R SQ 1300 30K 18W 8" EMC	-	18 W
929004654601	DL252 G2 R SQ 1300 65K 18W 8" EMC	-	18 W
929004654701	DL252 G2 R SQ 2000 65K 24W 11" EMC	-	24 W
929002654801	SL052 RD SPOT 070 4.2W 27K WH WV	-	4.2 W
929002655001	SL052 RD SPOT 070 4.2W 65K WH WV	-	4.2 W
929002655401	SL052 RD SPOT 070 6.2W 27K WH WV	50 or 60 Hz	6.2 W
929002655601	SL052 RD SPOT 070 6.2W 65K WH WV	50 or 60 Hz	6.2 W
929004653101	DL252 G2 R Rd 400 30K 6W 4" EMC	-	6 W
929004653201	DL252 G2 R Rd 400 40K 6W 4" EMC	-	6 W
929004653301	DL252 G2 R Rd 400 65K 6W 4" EMC	-	6 W
929004653401	DL252 G2 R Rd 900 30K 12W 6" EMC	-	12 W
929004653501	DL252 G2 R Rd 900 40K 12W 6" EMC	-	12 W
929004653601	DL252 G2 R Rd 900 65K 12W 6" EMC	-	12 W
929004653701	DL252 G2 R Rd 1300 30K 18W 8" EMC	-	18 W
929004653801	DL252 G2 R Rd 1300 40K 18W 8" EMC	-	18 W
929004653901	DL252 G2 R Rd 1300 65K 18W 8" EMC	-	18 W
929004654001	DL252 G2 R Rd 2000 65K 24W 11" EMC	-	24 W
929004655501	DL252 G2 SF SQ 900 65K 12W 6" EMC	-	12 W
929004655601	DL252 G2 SF SQ 1300 65K 18W 8" EMC	-	18 W
929002655101	SL052 SQ SPOT 070 4.2W 27K WH WV	-	4.2 W
929002655301	SL052 SQ SPOT 070 4.2W 65K WH WV	-	4.2 W
929002655701	SL052 SQ SPOT 070 6.2W 27K WH WV	-	6.2 W
929002655901	SL052 SQ SPOT 070 6.2W 65K WH WV	-	6.2 W

Mechanical and Housing

Order Code	Full Product Name	Mech. impact protection code
929004655001	DL252 G2 SF RD 900 65K 12W 6" EMC	IK01
929004655201	DL252 G2 SF RD 1300 40K 18W 8" EMC	IK01
929004655301	DL252 G2 SF RD 1300 65K 18W 8" EMC	IK01
929004655401	DL252 G2 SF RD 2000 65K 24W 11" EMC	IK01
929004654101	DL252 G2 R SQ 400 30K 6W 4" EMC	IK01
929004654201	DL252 G2 R SQ 400 65K 6W 4" EMC	IK01
929004654301	DL252 G2 R SQ 900 30K 12W 6" EMC	IK01
929004654401	DL252 G2 R SQ 900 65K 12W 6" EMC	IK01
929004654501	DL252 G2 R SQ 1300 30K 18W 8" EMC	IK01
929004654601	DL252 G2 R SQ 1300 65K 18W 8" EMC	IK01
929004654701	DL252 G2 R SQ 2000 65K 24W 11" EMC	IK01
929002654801	SL052 RD SPOT 070 4.2W 27K WH WV	IK03
929002655001	SL052 RD SPOT 070 4.2W 65K WH WV	IK03
929002655401	SL052 RD SPOT 070 6.2W 27K WH WV	IK03
929002655601	SL052 RD SPOT 070 6.2W 65K WH WV	IK03
929004653101	DL252 G2 R Rd 400 30K 6W 4" EMC	IK01
929004653201	DL252 G2 R Rd 400 40K 6W 4" EMC	IK01
929004653301	DL252 G2 R Rd 400 65K 6W 4" EMC	IK01
929004653401	DL252 G2 R Rd 900 30K 12W 6" EMC	IK01
929004653501	DL252 G2 R Rd 900 40K 12W 6" EMC	IK01
929004653601	DL252 G2 R Rd 900 65K 12W 6" EMC	IK01
929004653701	DL252 G2 R Rd 1300 30K 18W 8" EMC	IK01
929004653801	DL252 G2 R Rd 1300 40K 18W 8" EMC	IK01
929004653901	DL252 G2 R Rd 1300 65K 18W 8" EMC	IK01
929004654001	DL252 G2 R Rd 2000 65K 24W 11" EMC	IK01
929004655501	DL252 G2 SF SQ 900 65K 12W 6" EMC	IK01
929004655601	DL252 G2 SF SQ 1300 65K 18W 8" EMC	IK01
929002655101	SL052 SQ SPOT 070 4.2W 27K WH WV	IK03

Order Code	Full Product Name	Mech. impact protection code
929002655301	SL052 SQ SPOT 070 4.2W 65K WH WV	IK03
929002655701	SL052 SQ SPOT 070 6.2W 27K WH WV	IK03

Order Code	Full Product Name	Mech. impact protection code
929002655901	SL052 SQ SPOT 070 6.2W 65K WH WV	IK03

Initial Performance (IEC Compliant)

Order Code	Full Product Name	Initial chromaticity	Luminous flux tolerance
929004655001	DL252 G2 SF RD 900 65K 12W 6" EMC	(0.313, 0.337) <6SDCM	+/-10%
929004655201	DL252 G2 SF RD 1300 40K 18W 8" EMC	(0.380, 0.380) <6SDCM	+/-10%
929004655301	DL252 G2 SF RD 1300 65K 18W 8" EMC	(0.313, 0.337) <6SDCM	+/-10%
929004655401	DL252 G2 SF RD 2000 65K 24W 11" EMC	(0.313, 0.337) <6SDCM	+/-10%
929004654101	DL252 G2 R SQ 400 30K 6W 4" EMC	(0.440, 0.403) <6SDCM	+/-10%
929004654201	DL252 G2 R SQ 400 65K 6W 4" EMC	(0.313, 0.337) <6SDCM	+/-10%
929004654301	DL252 G2 R SQ 900 30K 12W 6" EMC	(0.440, 0.403) <6SDCM	+/-10%
929004654401	DL252 G2 R SQ 900 65K 12W 6" EMC	(0.313, 0.337) <6SDCM	+/-10%
929004654501	DL252 G2 R SQ 1300 30K 18W 8" EMC	(0.440, 0.403) <6SDCM	+/-10%
929004654601	DL252 G2 R SQ 1300 65K 18W 8" EMC	(0.313, 0.337) <6SDCM	+/-10%
929004654701	DL252 G2 R SQ 2000 65K 24W 11" EMC	(0.313, 0.337) <6SDCM	+/-10%
929002654801	SL052 RD SPOT 070 4.2W 27K WH WV	⟪ , 0.463, 0.42 ⟫ 6SDCM	-10% / +25%
929002655001	SL052 RD SPOT 070 4.2W 65K WH WV	(0.313, 0.337 ⟫ 6SDCM	-10% / +25%
929002655401	SL052 RD SPOT 070 6.2W 27K WH WV	⟪ , 0.457, 0.41 ⟫ 6SDCM	-10+25
929002655601	SL052 RD SPOT 070 6.2W 65K WH WV	⟪ , 0.312, 0.328 ⟫ 6SDCM	-10+25
929004653101	DL252 G2 R Rd 400 30K 6W 4" EMC	(0.440, 0.403) <6SDCM	+/-10%

Order Code	Full Product Name	Initial chromaticity	Luminous flux tolerance
929004653201	DL252 G2 R Rd 400 40K 6W 4" EMC	(0.380, 0.380) <6SDCM	+/-10%
929004653301	DL252 G2 R Rd 400 65K 6W 4" EMC	(0.313, 0.337) <6SDCM	+/-10%
929004653401	DL252 G2 R Rd 900 30K 12W 6" EMC	(0.440, 0.403) <6SDCM	+/-10%
929004653501	DL252 G2 R Rd 900 40K 12W 6" EMC	(0.380, 0.380) <6SDCM	+/-10%
929004653601	DL252 G2 R Rd 900 65K 12W 6" EMC	(0.313, 0.337) <6SDCM	+/-10%
929004653701	DL252 G2 R Rd 1300 30K 18W 8" EMC	(0.440, 0.403) <6SDCM	+/-10%
929004653801	DL252 G2 R Rd 1300 40K 18W 8" EMC	(0.380, 0.380) <6SDCM	+/-10%
929004653901	DL252 G2 R Rd 1300 65K 18W 8" EMC	(0.313, 0.337) <6SDCM	+/-10%
929004654001	DL252 G2 R Rd 2000 65K 24W 11" EMC	(0.313, 0.337) <6SDCM	+/-10%
929004655501	DL252 G2 SF SQ 900 65K 12W 6" EMC	(0.313, 0.337) <6SDCM	+/-10%
929004655601	DL252 G2 SF SQ 1300 65K 18W 8" EMC	(0.313, 0.337) <6SDCM	+/-10%
929002655101	SL052 SQ SPOT 070 4.2W 27K WH WV	⟪ , 0.463, 0.42 ⟫ 6SDCM	-10% / +25%
929002655301	SL052 SQ SPOT 070 4.2W 65K WH WV	⟪ , 0.313, 0.337 ⟫ 6SDCM	-10% / +25%
929002655701	SL052 SQ SPOT 070 6.2W 27K WH WV	⟪ , 0.457, 0.41 ⟫ 6SDCM	-10% / +25%
929002655901	SL052 SQ SPOT 070 6.2W 65K WH WV	⟪ , 0.312, 0.328 ⟫ 6SDCM	-10% / +25%

Over Time Performance (IEC Compliant)

Order Code	Full Product Name	Driver failure rate at 5000 h
929004655001	DL252 G2 SF RD 900 65K 12W 6" EMC	-
929004655201	DL252 G2 SF RD 1300 40K 18W 8" EMC	-
929004655301	DL252 G2 SF RD 1300 65K 18W 8" EMC	-
929004655401	DL252 G2 SF RD 2000 65K 24W 11" EMC	-
929004654101	DL252 G2 R SQ 400 30K 6W 4" EMC	-
929004654201	DL252 G2 R SQ 400 65K 6W 4" EMC	-

Order Code	Full Product Name	Driver failure rate at 5000 h
929004654301	DL252 G2 R SQ 900 30K 12W 6" EMC	-
929004654401	DL252 G2 R SQ 900 65K 12W 6" EMC	-
929004654501	DL252 G2 R SQ 1300 30K 18W 8" EMC	-
929004654601	DL252 G2 R SQ 1300 65K 18W 8" EMC	-
929004654701	DL252 G2 R SQ 2000 65K 24W 11" EMC	-
929002654801	SL052 RD SPOT 070 4.2W 27K WH WV	5 %

Latam Downlight

Order Code	Full Product Name	Driver failure rate at 5000 h
929002655001	SL052 RD SPOT 070 4.2W 65K WH WV	5 %
929002655401	SL052 RD SPOT 070 6.2W 27K WH WV	5
929002655601	SL052 RD SPOT 070 6.2W 65K WH WV	5
929004653101	DL252 G2 R Rd 400 30K 6W 4" EMC	-
929004653201	DL252 G2 R Rd 400 40K 6W 4" EMC	-
929004653301	DL252 G2 R Rd 400 65K 6W 4" EMC	-
929004653401	DL252 G2 R Rd 900 30K 12W 6" EMC	-
929004653501	DL252 G2 R Rd 900 40K 12W 6" EMC	-
929004653601	DL252 G2 R Rd 900 65K 12W 6" EMC	-
929004653701	DL252 G2 R Rd 1300 30K 18W 8" EMC	-
929004653801	DL252 G2 R Rd 1300 40K 18W 8" EMC	-
929004653901	DL252 G2 R Rd 1300 65K 18W 8" EMC	-
929004654001	DL252 G2 R Rd 2000 65K 24W 11" EMC	-
929004655501	DL252 G2 SF SQ 900 65K 12W 6" EMC	-
929004655601	DL252 G2 SF SQ 1300 65K 18W 8" EMC	-
929002655101	SL052 SQ SPOT 070 4.2W 27K WH WV	5 %
929002655301	SL052 SQ SPOT 070 4.2W 65K WH WV	5 %
929002655701	SL052 SQ SPOT 070 6.2W 27K WH WV	5 %
929002655901	SL052 SQ SPOT 070 6.2W 65K WH WV	5 %

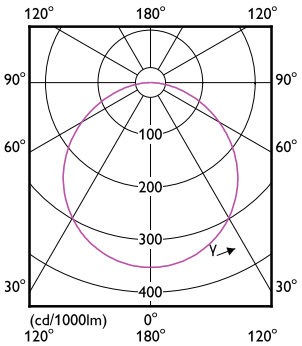

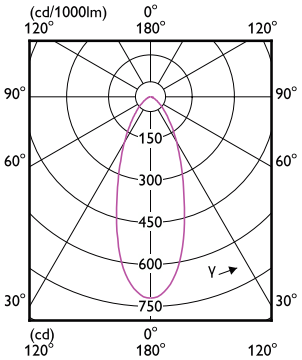

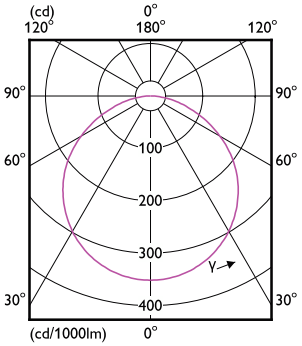

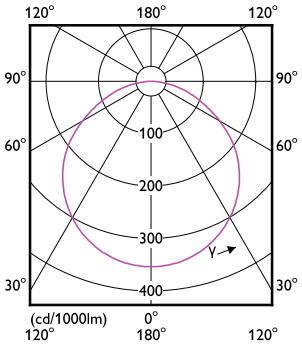

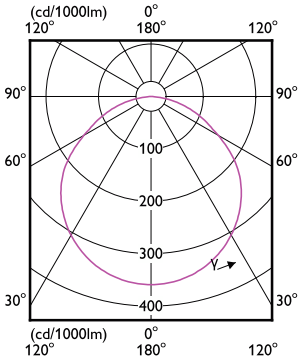

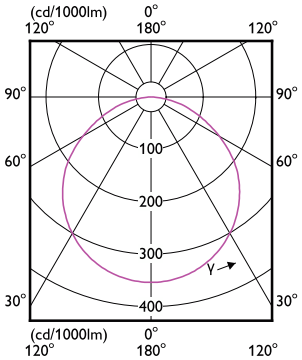

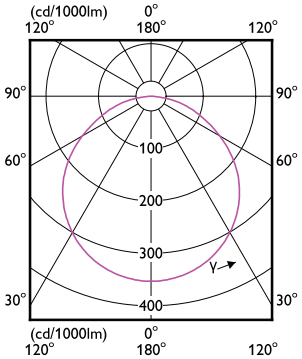

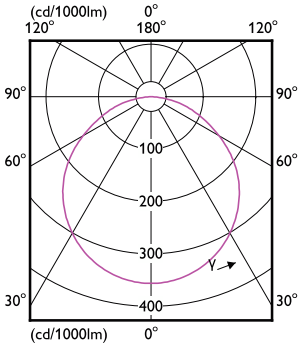

Latam Downlight

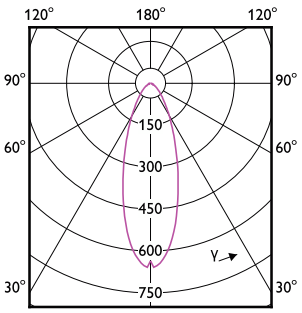

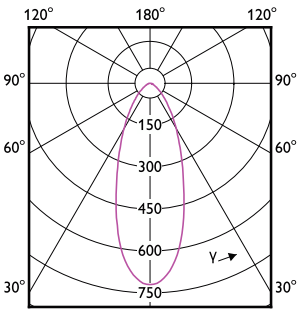

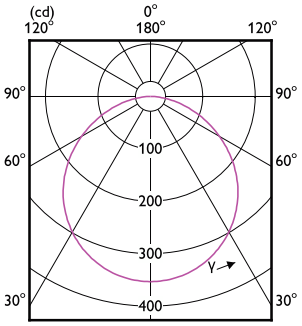

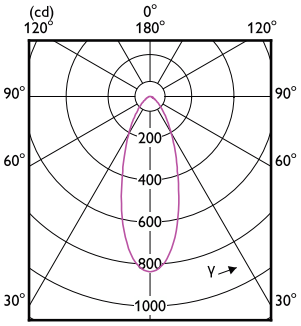

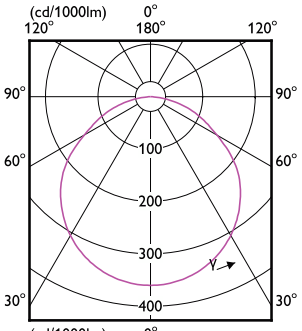

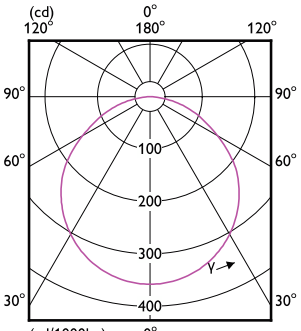

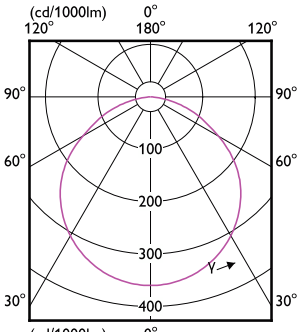

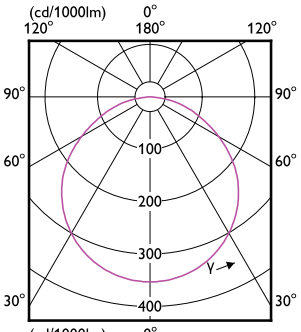

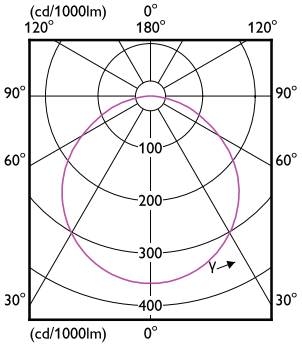

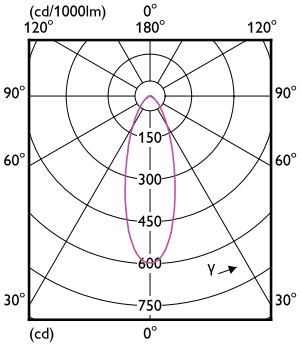

Latam Downlight

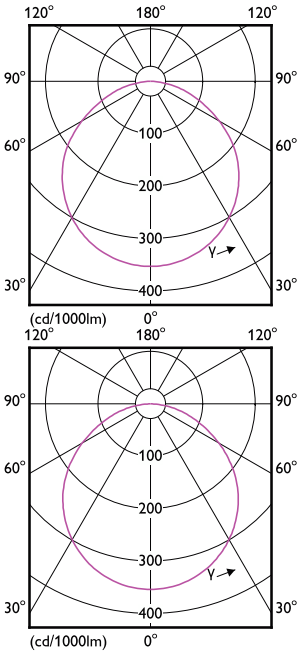

Latam Downlight

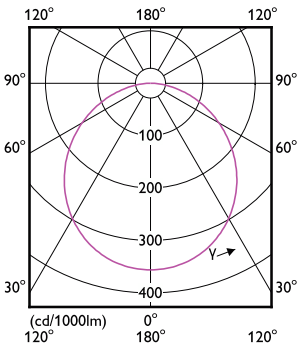

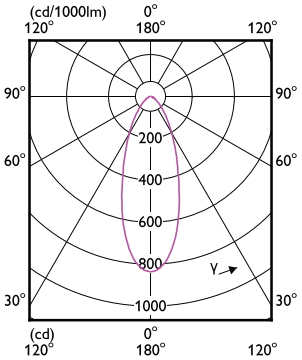

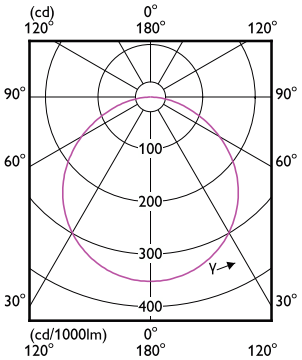

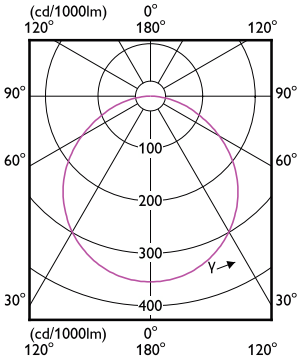

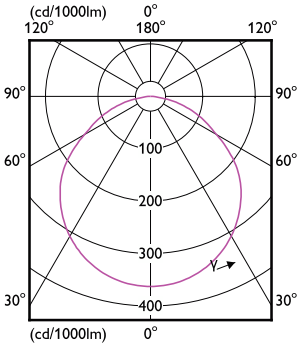

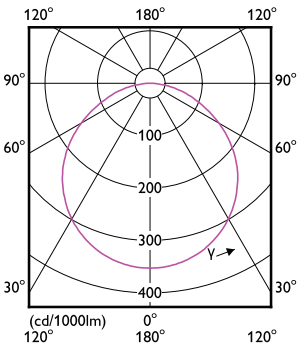

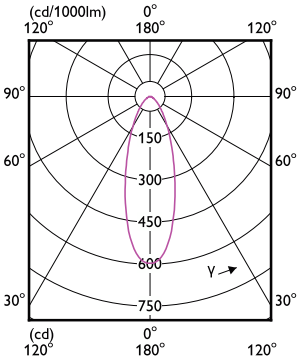

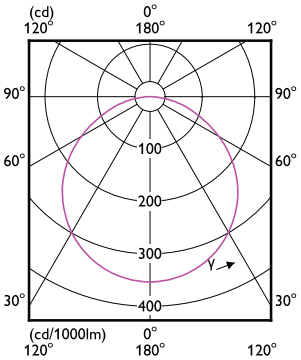

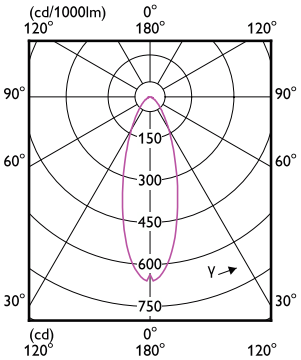

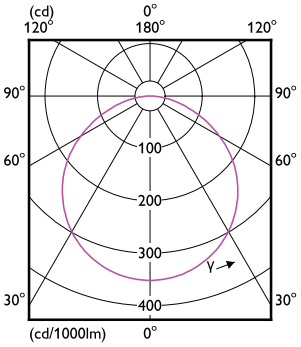

© 2025 Signify Holding All rights reserved. Signify does not give any representation or warranty as to the accuracy or completeness of the information included herein and shall not be liable for any action in reliance thereon. The information presented in this document is not intended as any commercial offer and does not form part of any quotation or contract, unless otherwise agreed by Signify. All trademarks are owned by Signify Holding or their respective owners.