PHILIPS

Cube 300

11645603



Enhancing your Petrol Station Lighting

In a transparent market like petrol station, operators are under constant pressure to maintain its profitability through lower operating cost, while at the same time attracting more customers with clean and crisp station that gives comfort and safety feeling.Philips Cube 300 LED luminaires, perfect product design and latest LED technology combination for highly efficient light outputs can turn your petrol station into a branded landmark and help visitors to approach safely in visual comfort. Cube 300 is an Intuitive recessed mounted under- canopy lighting that ensures optimal visual conditions while enabling huge energy savings. The luminaire's precision-control optics enables light to be distributed where it is needed the most. Its bottom maintainable design makes this an easy-to-install and maintain from bottom of the canopy thus making it safer solution and also helps in reducing the maintenance cost.

Benefits

- System efficacy of 120 lm/W leads to higher energy savings.
- Suitable for Recessed mounting from bottom for ease of installation, maintenance and employee safety.
- Pressure Die cast Al housing with optimal thermal design to ensure the longer life class .

Applications

- Petrol and Convenience
- Arena and Sports
- Airports
- Under Canopy
- Petrol Stations

Features

- Ingress Protection -IP66
- Impact Resistance IK06
- Designed for operations under diverse environment from 0˚C to 50˚C
- Pressure die-cast housing offers excellent corrosion-resistance and robustness.
- System efficiency 120 lm/W
- Internal Surge Protection 4 kV
- External SPD 10 kV/ 5 kA
- THD<10%
- Wide Operating Voltage : 160-270V
- Phase to Phase Protection for 8 hours
- Long Life class : L70B50 @ 50K Hours

Versions



BY487

Dimensional drawing

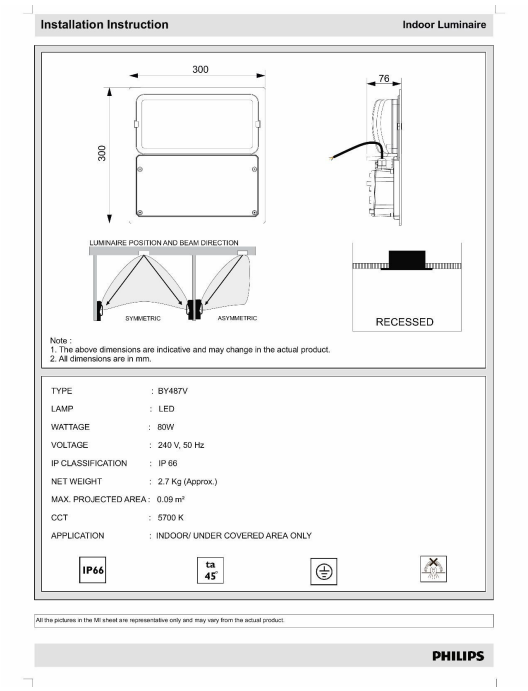

BY487V LED96S CW M3-S60 PSU FG WH

General Information

Driver included	Yes

Light Technical

Luminous Flux	9,600 lm
Correlated Color Temperature (Nom)	5700 K
Luminous Efficacy (rated) (Nom)	120 lm/W
Color rendering index (CRI)	70
Beam angle of light source	60 degree(s)
Optic type	Symmetrical

Operating and Electrical

Input Voltage	- V
Power Consumption	80 W
Protection class IEC	Safety class I

Mechanical and Housing

Housing Color	Aluminum and white
Ingress protection code	IP66 [Dust penetration-protected, jet-proof]
Mech. impact protection code	IK06 [1 J]
Optical cover type	Tempered glass

Approval and Application

Flammability mark	For mounting on normally flammable surfaces
Ambient temperature range	0 to +50 °C

© 2026 Signify Holding. All rights reserved. The information provided herein is subject to change, without notice. Signify does not give any representation or warranty as to the accuracy or completeness of the information included herein and shall not be liable for any action in reliance thereon. The information presented in this document is not intended as any commercial offer and does not form part of any quotation or contract, unless otherwise agreed by Signify. Philips and the Philips Shield Emblem are registered trademarks of Koninklijke Philips N.V.