PHILIPS

WT120C G2 LED27S/840 PSU L1200

911401823580



CoreLine Waterproof, 20.5 W, L1200 mm, 2700 lm, 4000 K, Wide beam, Matte, IP65, IK08, TW1-ready

L1200 mm, Polycarbonate, Gray, Power supply unit (On/Off), 2700 lm, 20.5 W, 131 lm/W, 4000 K, (0.38,0.38)SDCM<=3, Wide beam, Matte, Polycarbonate, IP65 | Dust penetration-protected, jet-proof, IK08 | 5 J vandal-protected, Safety class I, Push-in connector 3-pole, Simple Connection and removable cover available for feed-through wiring 1-phase (internal wiring is not included)

Warnings and Safety

- UV radiation will damage the material over time resulting in loss of waterproof sealing and IP66 rating.
- Do not install the luminaire in locations where it will be exposed to direct sunlight.

General Information

Light source replaceable	No
Number of gear units	1 unit
Driver included	Yes
Sustainability rating	Unclassified
Service tag	Yes
Lighting Technology	LED
Value ladder	Performance
Warranty period	5 years

Light Technical

Luminous Flux	2,700 lm
Correlated Color Temperature (Nom)	4000 K
Luminous Efficacy (rated) (Nom)	131 lm/W
Color rendering index (CRI)	>80
Light source color	840 neutral white
Optic type	Wide beam
Luminaire light beam spread	105°
Unified glare rating CEN	25

Operating and Electrical

Input Voltage	220 to 240 V
Line Frequency	50 or 60 Hz
Inrush current	3.58 A
Inrush time	0.04 ms
Power Consumption	20.5 W
Power Factor (Fraction)	0.9
Connection	Push-in connector 3-pole
Cable	-
Number of products on MCB of 16 A type B	80
Suitable for random switching	Yes
Protection class IEC	Safety class I
Feed-through wiring	Simple Connection and removable cover available for feed-through wiring 1-phase (internal wiring is not included)
Total harmonic distortion	20 %

Controls and Dimming

Dimmable	No
Driver/power unit/transformer	Power supply unit (On/Off)
Control interface	-
Constant light output	No
Maximum dim level	Not applicable

Mechanical and Housing

Housing Material	Polycarbonate
Reflector material	Steel
Optic material	Polycarbonate
Optical cover material	Polycarbonate
Fixation material	Stainless steel
Housing Color	Gray
Optical cover finish	Matte
Overall length	1,215 mm
Overall width	80 mm
Overall height	76 mm
Dimensions (Height x Width x Depth)	76 x 80 x 1215 mm
Ingress protection code	IP65 [Dust penetration-protected, jet-proof]
Mech. impact protection code	IK08 [5 J vandal-protected]
Net Weight (Piece)	1.400 kg

Approval and Application

Glow-wire test	Temperature 850 °C, duration 30 s
Flammability mark	For mounting on easily flammable surfaces
CE mark	Yes
ENEC mark	ENEC mark
Photobiological risk	Photobiological risk group 0 @200mm to EN62778
EU RoHS compliant	Yes
Performance ambient temperature Tq	25 °C
Remarks	*-Per Lighting Europe guidance paper “Evaluating performance of LED based luminaires - January 2018”: statistically there is no relevant difference in lumen maintenance between B50 and for example B10. Therefore, the median useful life (B50) value also represents the B10 value.

Flickering value (PstLM) - Flickering value as per EN 61000-3-3	1
Stroboscopic effect visibility measure (SVM)	1.6
Ambient temperature range	-20 to +40 °C

Initial Performance (IEC Compliant)

Luminous flux tolerance	+/-10%
Initial chromaticity	(0.38,0.38)SDCM<=3
Power consumption tolerance	+/-10%

Over Time Performance (IEC Compliant)

Control gear failure rate at median useful life 50000 h	5 %
Lumen maintenance (EN-IEC 62722-2-1) at median useful life* 50000 h	L80
Lumen maintenance (EN-IEC 62722-2-1) at median useful life* 100000 h	L70

Sustainability Data

Repair class	Repair Class C, the driver of this luminaire can be replaced by a service technician. Special care is required during disassembly and reassembly, and specific tools may be required. Parts and documentation are available for a period of time.
Embedded carbon (A1-A3)	10.3 kg CO_2e
Product non-virgin material ratio	11.7 %
Recyclable content ratio of the finished product	53.9 %
GWP total B6 (kg CO2eq) Declared Unit	Please calculate using your local energy mix value: Power Declared Unit (kW) * Service life (hrs) Declared Unit * Energy mix (kg CO2eq / kwh)
GWP total B6 (kg CO2eq) Functional Unit	Please calculate using your local energy mix value: Power Declared Unit (kW) * 1000 (lm) /lumen output (lm) Declared Unit * 35000 (hrs) * Energy mix (kg CO2 eq / kwh)
Non-virgin material ratio of the packaging	Cardboard > 80% recycled
Packaging Recyclable content ratio	Cardboard recycling rate > 80%
Packaging Material	Cardboard

Product Data

Order product name	WT120C G2 LED27S/840 PSU L1200
Full product name	WT120C G2 LED27S/840 PSU L1200
Full product code	871829184046600
Order code	911401823580
Material Nr. (12NC)	911401823580
Numerator - Quantity Per Pack	1
EAN/UPC - Product/Case	8718291840466
Numerator - Packs per outer box	9
EAN/UPC - Case	8710163346328

Dimensional drawing

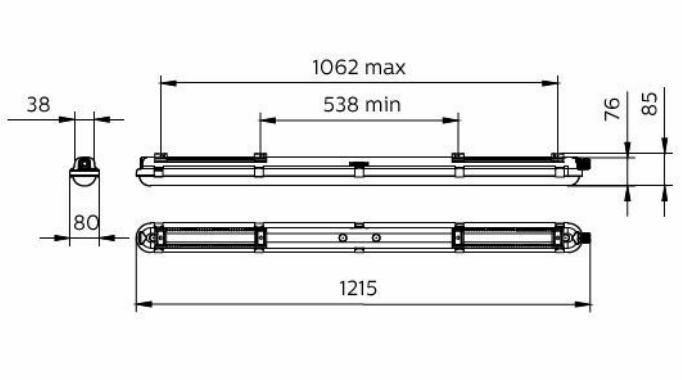

Polar normal diagrams

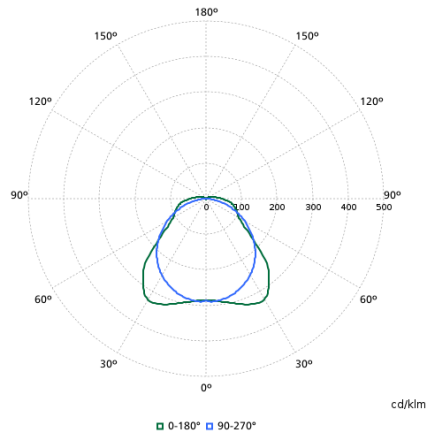

Related Documents

Documents and certificates	Document Name	Download
Installation Instructions	CoreLine waterproof WT120C G2 PSU_2023 05.pdf	Download
Environmental Product Declaration	EPD-Philips-CoreLine-Waterproof-911401823580.pdf	Download
Tender text	Tender_Text_911401823580_en_AA.txt	Download

Photometry and lighting design	Document Name	Download
IES File	wt120c-g2-led27s-840-psu-l1200-911401823580.ies	Download
LDT File	wt120c-g2-led27s-840-psu-l1200-911401823580.ldt	Download
ROLF File	wt120c-g2-led27s-840-psu-l1200-911401823580.rolfz	Download
ULD File	wt120c-g2-led27s-840-psu-l1200-911401823580.uld	Download
Revit file	wt120c-g2-led27s-840-psu-l1200-911401823580.zip	Download

© 2026 Signify Holding. All rights reserved. The information provided herein is subject to change, without notice. Signify does not give any representation or warranty as to the accuracy or completeness of the information included herein and shall not be liable for any action in reliance thereon. The information presented in this document is not intended as any commercial offer and does not form part of any quotation or contract, unless otherwise agreed by Signify. Philips and the Philips Shield Emblem are registered trademarks of Koninklijke Philips N.V.