PHILIPS

SmartBright LED Downlight DN029B

DN029B



The perfect energy efficient LED replacement for conventional downlights

SmartBright Downlight family is the perfect energy efficient LED replacement for conventional downlights. It offers three solutions around energy efficiency, selectable colour temperature and being a dimming downlight: Essential SmartBright Downlight G2 DN029B– trailing and leading edge dimmable downlight is the ideal functional replacement for conventional downlights. This affordable and easy to install fitting delivers high energy savings without compromising on light quality. This hassle-free Essential SmartBright DN029B downlight provides you with the flexibility to select the perfect colour temperature (Warm White/Cool White/Day Light) for the application. Integrated with trailing/ leading edge dimming capability, this affordable and easy to install fitting delivers high energy savings without compromising on light quality. Essential SmartBright DN029B dimming downlight is the perfect hassle-free replacement for conventional dimmable downlights.

Benefits

- Reliable LED downlight for residential and general lighting applications
- Easy to install and IC-4 rated
- 3 years warranty

Applications

- Residential and general lighting

Features

- Trailing/leading edge dimmable
- Select from 3 colour temperatures with a slide of the dial
- IP54 front cover
- High efficiency for energy savings

Versions



Downlight DN029B G2 PSR E

Dimensional drawing

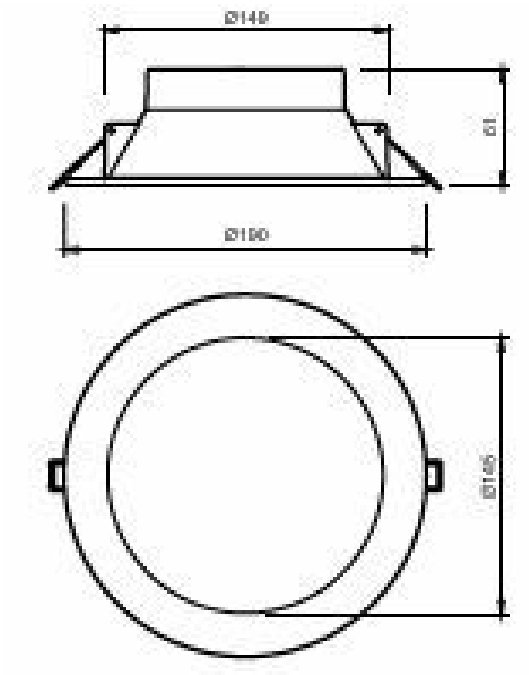

DN029B G2 LED12/CCT PSR-E D150 CAU

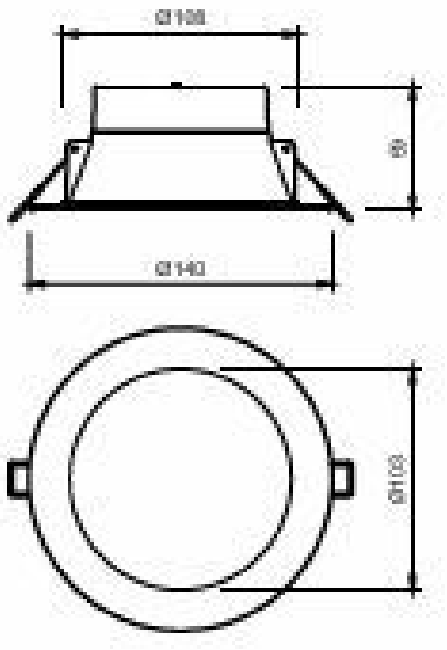

DN029B G2 LED10/CCT PSR-E D120 CAU

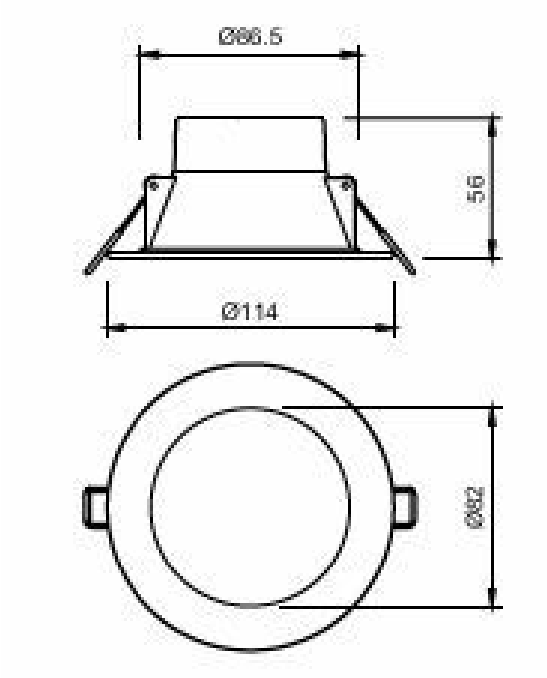

DN029B G2 LED8/CCT PSR-E D90 CAU 10-PK

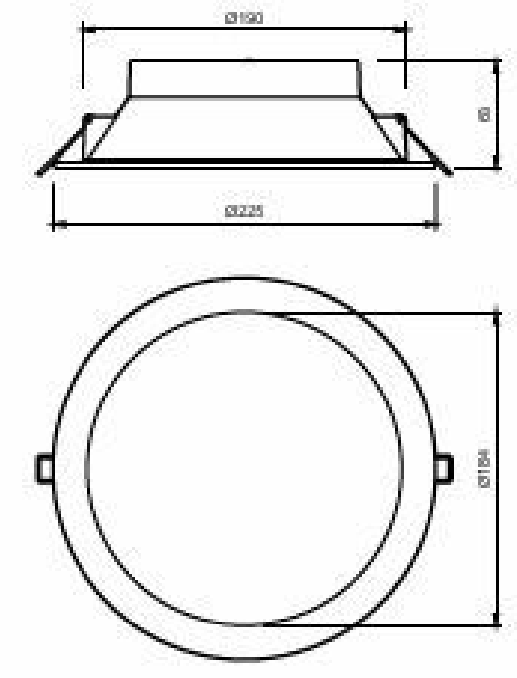

DN029B G2 LED20/CCT PSR-E D200 CAU

General Information

Light source replaceable	No

Light Technical

Color rendering index (CRI)	80

Operating and Electrical

Input Voltage	220 to 240 V
Line Frequency	50 or 60 Hz
Protection class IEC	Safety class II

Controls and Dimming

Dimmable	Yes

Mechanical and Housing

Housing Color	White
Ingress protection code	IP40/54 [Finger-protected; dust accumulation-protected, splash-proof]
Mech. impact protection code	IK03 [0.3 J]

Approval and Application

Ambient temperature range	-20 to +40 °C

Initial Performance (IEC Compliant)

Initial chromaticity	(3000K@, 0.4400, 0.4030; 4000K@0.37600.3656; 6500K@0.31300.3370) 6

Over Time Performance (IEC Compliant)

Driver failure rate at 5000 h	1.2 %

Light Technical

Order Code	Full Product Name	Luminous Flux	Correlated Color Temperature (Nom)	Luminous Efficacy (rated) (Nom)
929002531219	DN029B G2 LED8/CCT PSR-E D90 CAU	800 lm	3000 K 4000 K 6500 K	106.00 lm/W
929002531249	DN029B G2 LED8/CCT PSR-E D90 CAU 10-PK	800 lm	3000 K 4000 K 6500 K	106.00 lm/W
929002531319	DN029B G2 LED8/CCT PSR-E D90 NZ	800 lm	3000 K 4000 K 6500 K	106.00 lm/W
929002531419	DN029B G2 LED10/CCT PSR-E D120 CAU	1,000 lm	3000 K 4000 K 6500 K	111.00 lm/W
929002531519	DN029B G2 LED10/CCT PSR-E D120 NZ	1,000 lm	3000 K 4000 K 6500 K	111.00 lm/W
929002531619	DN029B G2 LED12/CCT PSR-E D150 CAU	1,200 lm	3000 K 4000 K 6500 K	114.00 lm/W
929002531719	DN029B G2 LED20/CCT PSR-E D200 CAU	2,000 lm	3000 K 4000 K 6500 K	111.00 lm/W

Operating and Electrical

Order Code	Full Product Name	Power Consumption
929002531219	DN029B G2 LED8/CCT PSR-E D90 CAU	7.5 W
929002531249	DN029B G2 LED8/CCT PSR-E D90 CAU 10-PK	7.5 W
929002531319	DN029B G2 LED8/CCT PSR-E D90 NZ	7.5 W
929002531419	DN029B G2 LED10/CCT PSR-E D120 CAU	9 W
929002531519	DN029B G2 LED10/CCT PSR-E D120 NZ	9 W
929002531619	DN029B G2 LED12/CCT PSR-E D150 CAU	10.5 W
929002531719	DN029B G2 LED20/CCT PSR-E D200 CAU	18 W

© 2026 Signify Holding. All rights reserved. The information provided herein is subject to change, without notice. Signify does not give any representation or warranty as to the accuracy or completeness of the information included herein and shall not be liable for any action in reliance thereon. The information presented in this document is not intended as any commercial offer and does not form part of any quotation or contract, unless otherwise agreed by Signify. Philips and the Philips Shield Emblem are registered trademarks of Koninklijke Philips N.V.