PHILIPS

# SP571P LED33S 4000 PSD W12L120 OC SI

919515814802

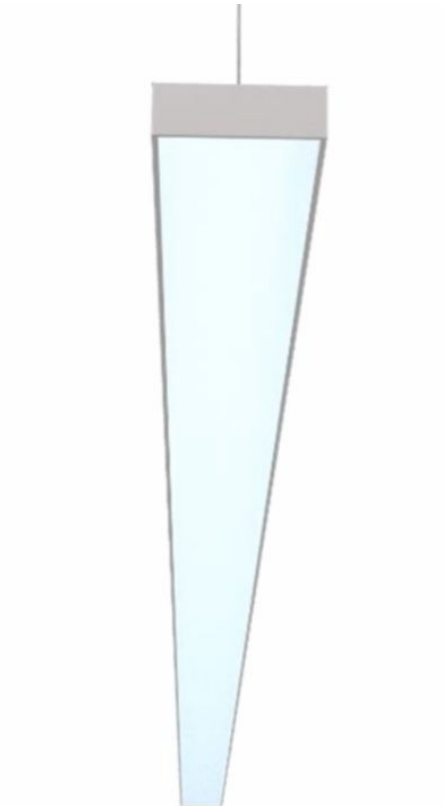

## BOLD and Sleek: A humble profile with minimal bezel

The Falt line family of luminaires gives you compromise-free office illumination with the sleek bar profile. It is a perfect solution for office application and general indoor area lighting . The range brings together high-flux lighting with a homogeneous optical system without making any concessions on energy efficiency design

### Warnings and Safety

- Meant for Indoor Application Only. Should not be used in outdoor environment.

### General Information

| | |
|---|---|
| Driver included | Yes |
| Light source engine type | LED |
| Warranty period | 1 years |

### Light Technical

| | |
|---|---|
| Upward light output ratio | 0.33 |
| Luminous Flux | 3,300 lm |
| Correlated Color Temperature (Nom) | 6500 K |
| Luminous Efficacy (rated) (Nom) | 120 lm/W |

| | |
|---|---|
| Color rendering index (CRI) | >80 |
| Beam angle of light source | - degree(s) |
| Light source color | 840 neutral white |
| Optic type | - |
| Luminaire light beam spread | - |
| Unified glare rating CEN | 19 |

## Operating and Electrical

| | |
|---|---|
| Input Voltage | 220 to 240 V |
| Line Frequency | 50 Hz |
| Power Consumption | 22 W |
| Power Factor (Fraction) | 0.95 |
| Voltage (Nom) | 120-277, 347 V |
| UL Type | TLED_Type A; UL listed HF |
| Protection class IEC | Safety class I |
| Surge Protection (Common/ Differential) | Surge protection level until 4 kV differential mode and 4 kV common mode |

## Controls and Dimming

| | |
|---|---|
| Dimmable | Yes |
| Control interface | DALI |

## Mechanical and Housing

| | |
|---|---|
| Housing Material | Aluminum extruded |
| Optic material | Polycarbonate |
| Optical cover material | Polycarbonate |
| Housing Color | Silver |
| Mounting device | Suspension set simple, standard |
| Optical cover shape | - |
| Overall length | 1,200 mm |
| Overall width | 120 mm |
| Overall height | 45 mm |
| Dimensions (Height x Width x Depth) | 45 x 120 x 1200 mm |
| Material | Aluminum |
| Ingress protection code | IP20 [Finger-protected] |
| Mech. impact protection code | IK02 [0.2 J standard] |
| Optical cover type | Opal prismatic cover |
| Net Weight (Piece) | 3.300 kg |

## Approval and Application

| | |
|---|---|
| Flammability mark | For mounting on normally flammable surfaces |
| Ambient temperature range | 0 to +45 °C |

## Initial Performance (IEC Compliant)

| | |
|---|---|
| Initial chromaticity | <5 |
| Power consumption tolerance | +/-10% |

## Over Time Performance (IEC Compliant)

| | |
|---|---|
| Median useful life L70B50 | 50,000 hour(s) |

## Product Data

| | |
|---|---|
| Order product name | SP571P LED33S 4000 PSD W12L120 OC SI |
| Full product name | SP571P LED33S 4000 PSD W12L120 OC SI |
| Order code | 919515814802 |
| Material Nr. (12NC) | 919515814802 |
| Numerator - Quantity Per Pack | 1 |
| Numerator - Packs per outer box | 4 |

## Dimensional drawing

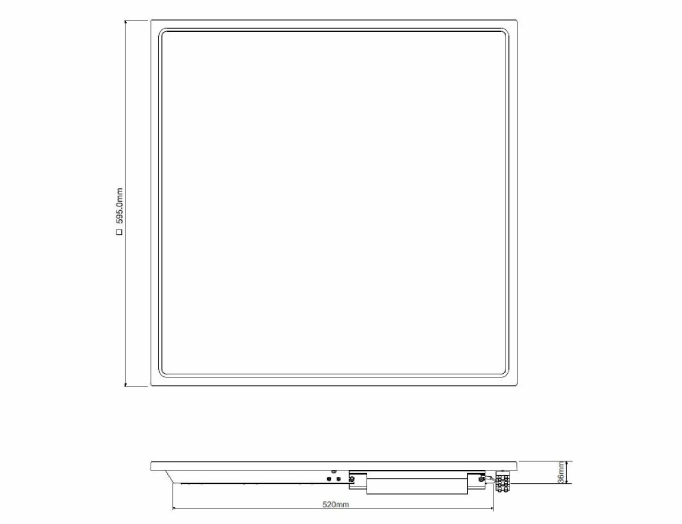


## Related Documents

| Documents and certificates | Document Name | Download |
|---|---|---|
| Installation Instructions | Flat Line_SP570-1_WH_1-INI.pdf | Download |

© 2026 Signify Holding. All rights reserved. The information provided herein is subject to change, without notice. Signify does not give any representation or warranty as to the accuracy or completeness of the information included herein and shall not be liable for any action in reliance thereon. The information presented in this document is not intended as any commercial offer and does not form part of any quotation or contract, unless otherwise agreed by Signify. Philips and the Philips Shield Emblem are registered trademarks of Koninklijke Philips N.V.