PHILIPS

HF-Performer III for TL5 lamps

HFP3TL5



Unsurpassed energy-efficient and long-lasting solution

HF-Performer III TL5 ballasts offer maximum versatility and meet all of the necessary commercial grade specifications. They also offer the added benefits of lamp striation reduction technology, making these ballasts compatible with energy-saving TL5 ECO lamps. As such, these ballasts are part of an overall high-efficiency lighting system that may help you or your customers to achieve any international or local energy code you need to comply with. HF-Performer III TL5 ballasts are the ideal choice for a broad range of new construction and retrofit applications within the commercial sector, including general surface mounting or office lighting, parking garages, warehouses, waterproof and other applications. The ballast is primarily designed for Indoor application. For outdoor application, the luminaire should be minimum ClassIand need to be sufficiently protected against water & dust. The installation should also be guard against any lightening surge or any other necessary electrical protection as deemed in such typical installation & application.

Benefits

- Exceptional energy efficiency with striation-reduction technology in lighting systems at lower temperatures
- Maximum reliability in system operation
- Multi-power technology for precise operation of multiple lamp types of various wattages

Applications

- Suitable for DC operation and emergency lighting installations; full compliance with requirements for emergency lighting according to EN 61347-2-3 -annex J
- Extended lamp life in frequent-switching applications, e.g. where occupancy sensors or motion detectors are used
- For luminaires of protection class I and protection class II used in office buildings, hospitals, supermarkets, department stores, industrial premises and schools

Features

- Highest CELMA Energy Efficiency Index A2 BAT
- Complies with CE, ENEC, EL, VDE-EMC, CCC marks of conformity
- Average nominal service lifetime over 100,000 hours (at Ta 50 °C) with a failure rate ≤ 0.1 % per 1,000 hours)
- Optimized lamp preheating for over 50,000 On/Off switch operations without replacement of lamps

Versions



Lamp Driver, eFluo, HF-P 1 14-35 TL5 HE III 220-240V



Lamp Driver, eFluo, HF-P 2 14-35 TL5 HE III 220-240V



Lamp Driver, eFluo, HF-P 154/155 TL5 HO/PL-L III IDC



GPPR PPPLTL-3 0001

Dimensional drawing

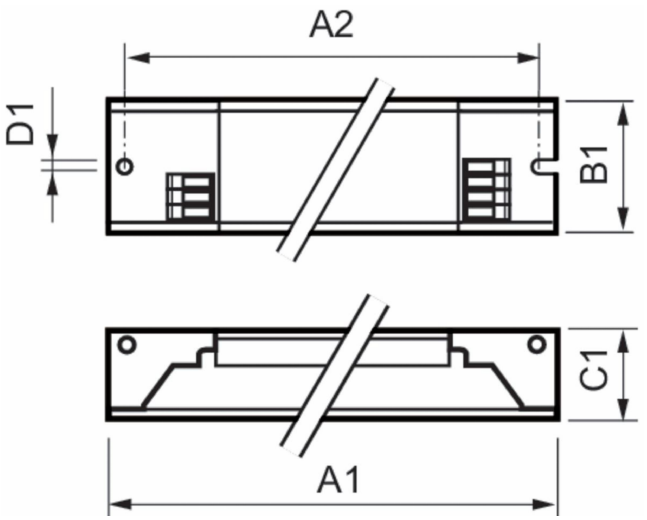

Product	D1	C1	A1	A2	B1
HF-P 1 14-35 TL5 HE III 220-240V	4.2 mm	22.0 mm	360.0 mm	350.0 mm	30.0 mm
HF-P 149 TL5 HO III 220-240V 50/60Hz IDC	4.2 mm	22.0 mm	360.0 mm	350.0 mm	30.0 mm
HF-P 154/155 TL5 HO/PLL III 220-240V IDC	4.2 mm	22.0 mm	360.0 mm	350.0 mm	30.0 mm
HF-P 180 TL5 III 220-240V 50/60Hz	4.2 mm	21.0 mm	360.0 mm	350.0 mm	30.0 mm
HF-P 2 14-35 TL5 HE III 220-240V	4.2 mm	22.0 mm	360.0 mm	350.0 mm	30.0 mm
HF-P 2 24/39 TL5 III 220-240V 50/60Hz	4.2 mm	21.0 mm	360.0 mm	350.0 mm	30.0 mm
HF-P 249 TL5 HO III 220-240V 50/60Hz IDC	4.2 mm	22.0 mm	360.0 mm	350.0 mm	30.0 mm

HF-P 254/255 TL5 HO/PLL III 220-240V IDC	4.2 mm	22.0 mm	360.0 mm	350.0 mm	30.0 mm
HF-P 280 TL5/PL-L III 220-240V 50/60Hz	4.2 mm	21.0 mm	425.0 mm	415.0 mm	30.0 mm
HF-P 3/4 14 TL5 III 220-240V 50/60Hz IDC	4.2 mm	21.0 mm	280.0 mm	265.0 mm	39.0 mm

Operating and Electrical

Input Voltage	220 to 240 V
Line Frequency	50 to 60 Hz
Input Frequency	50 to 60 Hz

Approval and Application

Energy Efficiency Index	A2 BAT

Operating and Electrical

Order Code	Full Product Name	Number of Products on MCB (16A Type B) (Nom)
913713031066	HF-P 1 14-35 TL5 HE III 220-240V	28
913713031166	HF-P 2 14-35 TL5 HE III 220-240V	28
913713028266	HF-P 154/155 TL5 HO/PLL III 220-240V IDC	28
913713028366	HF-P 254/255 TL5 HO/PLL III 220-240V IDC	12
913713028066	HF-P 149 TL5 HO III 220-240V 50/60Hz IDC	28
913713028166	HF-P 249 TL5 HO III 220-240V 50/60Hz IDC	12
913713033966	HF-P 3/4 14 TL5 III 220-240V 50/60Hz IDC	28
913713034166	HF-P 2 24/39 TL5 III 220-240V 50/60Hz	20
913713034266	HF-P 180 TL5 III 220-240V 50/60Hz	20
913713034366	HF-P 280 TL5/PL-L III 220-240V 50/60Hz	8

Mechanical and Housing

Order Code	Full Product Name	Housing
913713031066	HF-P 1 14-35 TL5 HE III 220-240V	L360x30x22
913713031166	HF-P 2 14-35 TL5 HE III 220-240V	L360x30x22
913713028266	HF-P 154/155 TL5 HO/PLL III 220-240V IDC	L360x30x22
913713028366	HF-P 254/255 TL5 HO/PLL III 220-240V IDC	L360x30x22
913713028066	HF-P 149 TL5 HO III 220-240V 50/60Hz IDC	L360x30x22
913713028166	HF-P 249 TL5 HO III 220-240V 50/60Hz IDC	L360x30x22
913713033966	HF-P 3/4 14 TL5 III 220-240V 50/60Hz IDC	L 280x40x21
913713034166	HF-P 2 24/39 TL5 III 220-240V 50/60Hz	L 360x30x21
913713034266	HF-P 180 TL5 III 220-240V 50/60Hz	L 360x30x21
913713034366	HF-P 280 TL5/PL-L III 220-240V 50/60Hz	L 425x30x21

© 2026 Signify Holding. All rights reserved. The information provided herein is subject to change, without notice. Signify does not give any representation or warranty as to the accuracy or completeness of the information included herein and shall not be liable for any action in reliance thereon. The information presented in this document is not intended as any commercial offer and does not form part of any quotation or contract, unless otherwise agreed by Signify. Philips and the Philips Shield Emblem are registered trademarks of Koninklijke Philips N.V.