PHILIPS

GreenSpace Accent Elbow Gen2

RS352B



GreenSpace Accent Elbow Gen2: A serviceable, upgradeable and extractable accent downlight for retail

With GreenSpace Accent Elbow Gen2, retailers and building operators can enjoy the superior quality of light and market-leading energy efficiency of PerfectAccent optics in an affordable and sustainable accent downlighter. Maintenance and upgrades of the driver, LED and optics is easy and requires only standard tools. Because of this, GreenSpace Accent Elbow Gen2 can support a circular lighting installation. The luminaire's extractable and rotatable spothead ensures that light can be aimed where required. In addition to dimming options, multiple system integration options are available, including wired and wireless. Fresh food LED lighting recipes are available for prolonged shelf life, better visual representation of food, reduction of food waste and increased sales. Check out our Fashion and Food catalog pages to find out more our about PremiumWhite, PremiumColor, Fresh Meat, Rosé, Frost and Champagne recipes.

Benefits

- More sparkle and enhanced shopper eye comfort with PerfectAccent optics
- Extend the useful life of the product with easy maintenance and upgrades
- The neutral clean product design helps blend in with the ceiling
- Flexible in store due to wide freedom of aiming

Applications

- Supermarkets and hypermarkets
- Large retail
- Shopping malls

Features

- Serviceable and upgradeable with standard tools
- Equipped with state-of-the-art PerfectAccent reflector optics
- Reduced carbon footprint due to high efficacy
- Available with fresh food LED lighting recipes and LED flavors
- Wired (DALI) and wireless connectivity options
- Optional front glass (recommended for dusty environments)
- All photometrical data is calculated without optional front glass. Flux should be reduced by 3.5% when using front glass.
- Cleaning of the optic should be done only with pressurized air. Touching the LED or reflector is forbidden. For food preparation areas and areas with high levels of dust, we strongly advise the use of the optional front glass, as it can be cleaned with a dry microfiber cloth.
- During maintenance, the product must be switched off and cooled down.
- The product must be installed out of arm's reach. Manipulating the product when hot is possible only with an insulated glove.

Versions



RS352B GreenSpace Accent Elbow White



RS352B GreenSpace Accent Elbow Black

Dimensional drawing

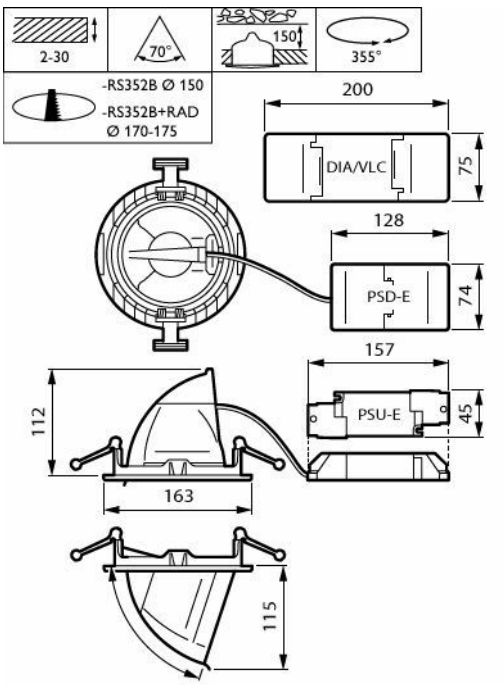

RS352B 27S/CH WIA-E MB ACC WH

Product details



GreenSpace Accent Elbow is fully serviceable and upgradeable



RS352B GreenSpace Accent Elbow Black



RS352B GreenSpace Accent Elbow White

General Information

Light source replaceable	Yes
Number of gear units	2 units
Driver included	Yes
Service tag	Yes

Light Technical

Beam angle of light source	120 degree(s)

Operating and Electrical

Input Voltage	220 to 240 V
Line Frequency	50 to 60 Hz
Suitable for random switching	Yes
Protection class IEC	Safety class II

Mechanical and Housing

Ingress protection code	IP20 [Finger-protected]
Mech. impact protection code	IK02 [0.2 J standard]
Explosion hazard class	-

Emergency Operation

Central Emergency	No

Approval and Application

Glow-wire test	Temperature 650 °C, duration 30 s
Flammability mark	-
CE mark	Yes
ENEC mark	ENEC mark
Flickering value (PstLM) - Flickering value as per EN 61000-3-3	0.9
Ambient temperature range	+10 to +35 °C

Initial Performance (IEC Compliant)

Luminous flux tolerance	-10% / +10%

Product Data

Product family code	RS352B [GreenSpace Accent Elbow G2]

Light Technical

Order Code	Full Product Name	Luminous Flux	Correlated Color Temperature (Nom)	Luminous Efficacy (rated) (Nom)	Color rendering index (CRI)	Optic type
910505102761	RS352B 27S/830 PSU-E WB WH	2,700 lm	3000 K	138 lm/W	>80	Wide beam
910505102762	RS352B 27S/840 PSU-E WB WH	2,800 lm	4000 K	143 lm/W	>80	Wide beam
910505102763	RS352B 27S/CH WIA-E MB ACC WH	2,600 lm	2700 K	127 lm/W	>80	Medium beam
910505102768	RS352B 39S/PW930 DIA-VLC-E WB WH	4,000 lm	3000 K	125 lm/W	>90	Wide beam
910505102760	RS352B 27S/827 PSU-E VWB BK	2,600 lm	2700 K	133 lm/W	>80	Very wide beam

Operating and Electrical

Order Code	Full Product Name	Power Consumption
910505102761	RS352B 27S/830 PSU-E WB WH	19.6 W
910505102762	RS352B 27S/840 PSU-E WB WH	19.6 W
910505102763	RS352B 27S/CH WIA-E MB ACC WH	20.5 W
910505102768	RS352B 39S/PW930 DIA-VLC-E WB WH	32 W
910505102760	RS352B 27S/827 PSU-E VWB BK	21 W

Controls and Dimming

Order Code	Full Product Name	Dimmable	Maximum dim level
910505102761	RS352B 27S/830 PSU-E WB WH	No	Not applicable
910505102762	RS352B 27S/840 PSU-E WB WH	No	Not applicable
910505102763	RS352B 27S/CH WIA-E MB ACC WH	Yes	10%
910505102768	RS352B 39S/PW930 DIA-VLC-E WB WH	Yes	1%
910505102760	RS352B 27S/827 PSU-E VWB BK	No	Not applicable

Mechanical and Housing

Order Code	Full Product Name	Housing Color
910505102761	RS352B 27S/830 PSU-E WB WH	White
910505102762	RS352B 27S/840 PSU-E WB WH	White
910505102763	RS352B 27S/CH WIA-E MB ACC WH	White
910505102768	RS352B 39S/PW930 DIA-VLC-E WB WH	White
910505102760	RS352B 27S/827 PSU-E VWB BK	Black

Initial Performance (IEC Compliant)

Order Code	Full Product Name	Initial chromaticity
910505102761	RS352B 27S/830 PSU-E WB WH	(0.434, 0.403) SDCM <2
910505102762	RS352B 27S/840 PSU-E WB WH	(0.382, 0.380) SDCM <2
910505102763	RS352B 27S/CH WIA-E MB ACC WH	(0.458, 0.410) SDCM <2
910505102768	RS352B 39S/PW930 DIA-VLC-E WB WH	(0.422, 0.386) SDCM <2
910505102760	RS352B 27S/827 PSU-E VWB BK	(0.458, 0.410) SDCM <2

Polar normal diagrams

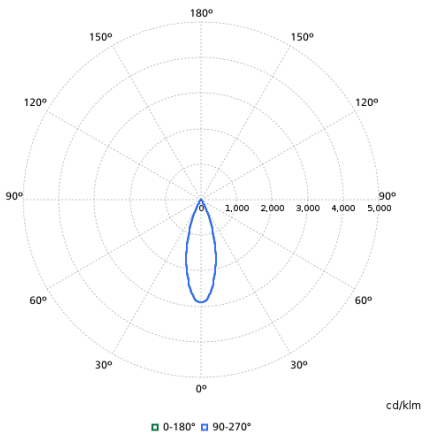

RS352B 27S/840 PSU-E WB WH
910505102762

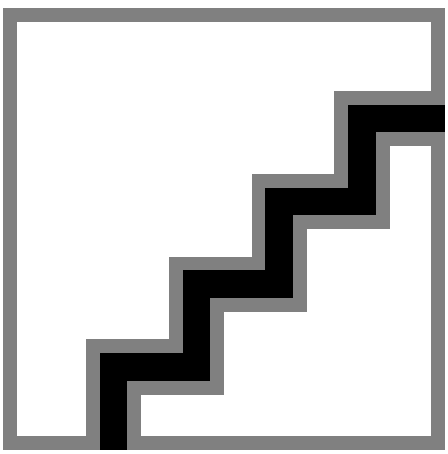

RS352B 27S/CH WIA-E MB ACC WH
910505102763

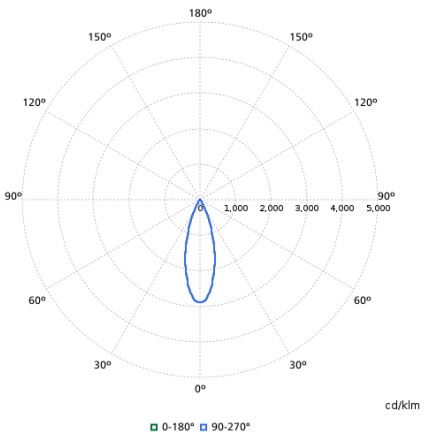

RS352B 27S/830 PSU-E WB WH
910505102761

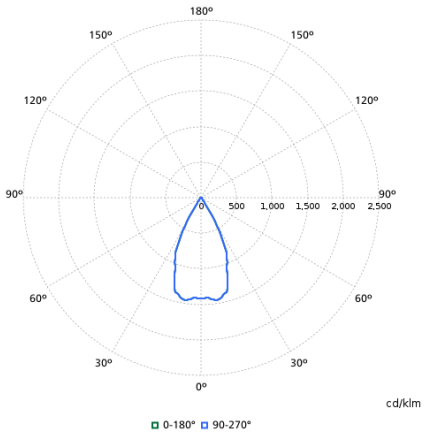

RS352B 27S/827 PSU-E VWB BK
910505102760

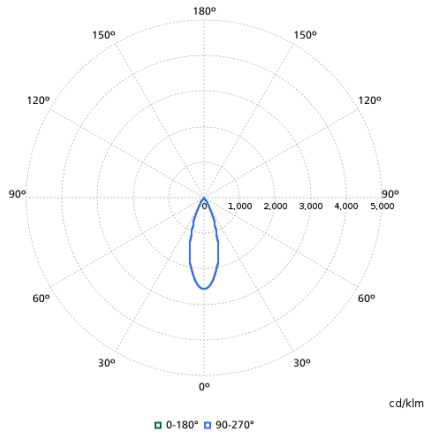

RS352B 39S/PW930 DIA-VLC-E WB WH
910505102768

© 2026 Signify Holding. All rights reserved. The information provided herein is subject to change, without notice. Signify does not give any representation or warranty as to the accuracy or completeness of the information included herein and shall not be liable for any action in reliance thereon. The information presented in this document is not intended as any commercial offer and does not form part of any quotation or contract, unless otherwise agreed by Signify. Philips and the Philips Shield Emblem are registered trademarks of Koninklijke Philips N.V.