

Simply great LED

Ledinaire SlimDownlight

The LEDINAIRE range contains a selection of popular off-the-shelf LED luminaires that come with the high Philips quality levels at a competitive price. Reliable, energy-efficient and affordable – just what you need

Benefits

- Philips quality and reliability
- Energy saving
- Comfortable diffuse surface of light

Features

- Multiple sizes and light levels available
- Multiple light colors available
- Utra slim design

Application

- Corridors
- Rest rooms
- Waiting rooms

Ledinaire SlimDownlight

Versions



DN065B G4 LED20 19W D200 RD



DN065B G4 830 840 865 PSU E RD



DN065B G4 LED12 12W D150 RD



DN065B G3 LDNR LED10 L150 SQ

Dimensional drawing

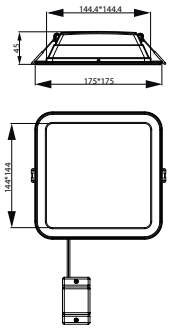

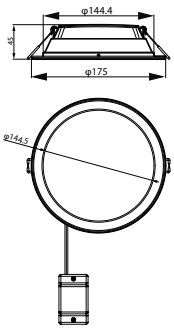

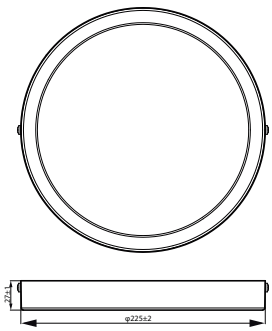

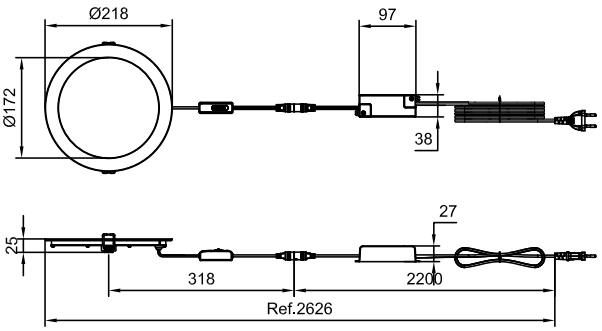

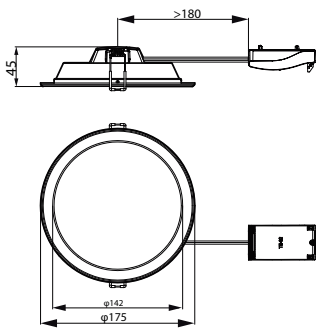

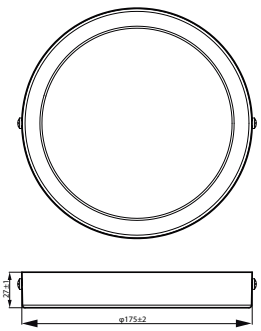

Dimensional drawing

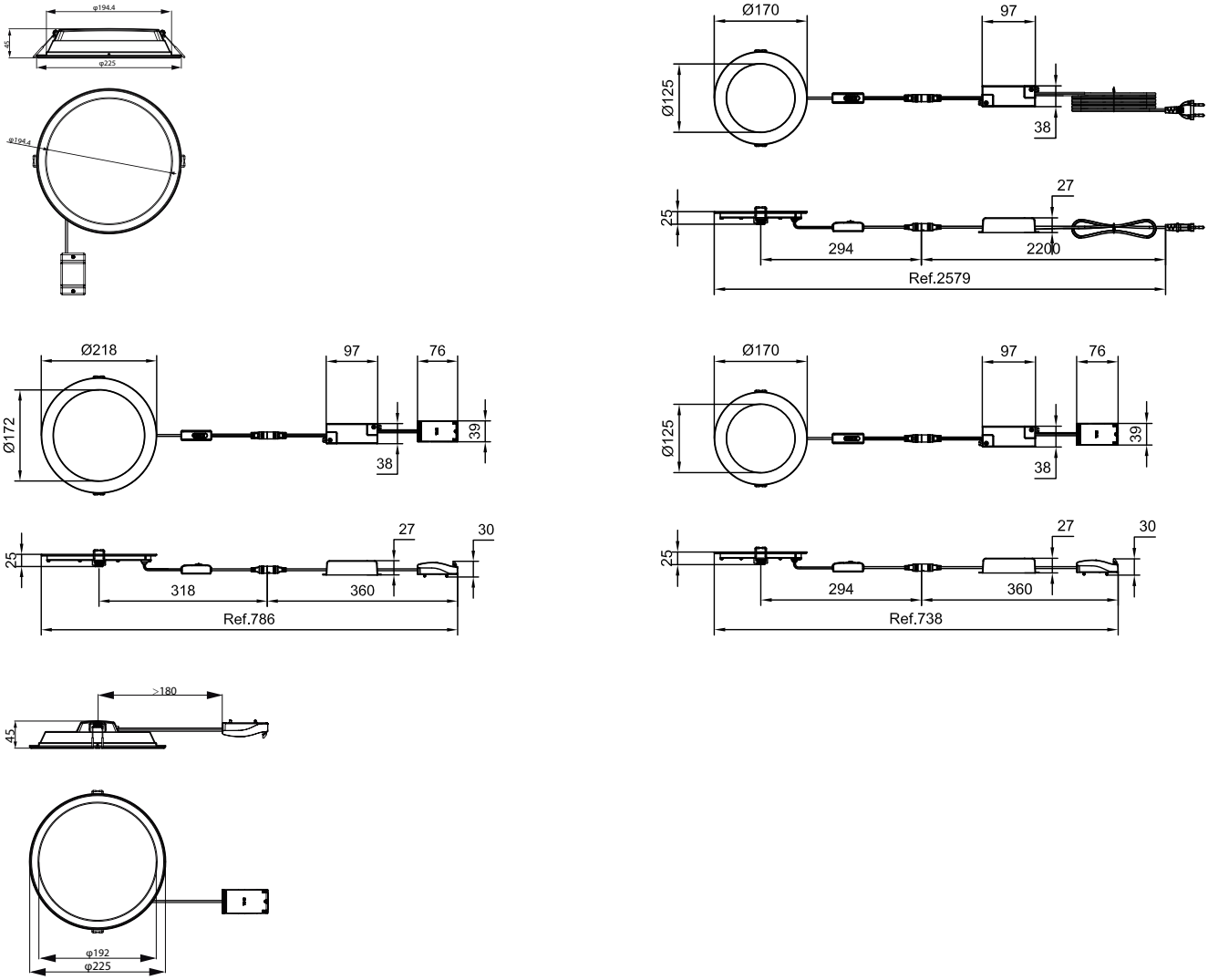

Product details



Philips Ledinaire slim downlight surface mounted DT03



Philips Ledinaire slim downlight surface mounted Back DT01

Product details

Philips Ledinaire slim downlight surface mounted DT04



Philips Ledinaire slim downlight surface mounted DT01



additional photo



Philips Ledinaire slim downlight recessed DT03



Philips Ledinaire slim downlight recessed DT01



Philips Ledinaire slim downlight recessed Back DT01



additional photo



Philips Ledinaire slim downlight surface mounted DT02



Ledinaire SlimDownlight

Product details

Philips Ledinaire slim downlight recessed DT02



Philips Ledinaire slim downlight recessed DT04



additional photo



General Information	
Driver included	Yes
Light source replaceable	No
Light Technical	
Color rendering index (CRI)	80
Operating and Electrical	
Protection class IEC	Safety class II
Input Voltage	220 to 240 V
Controls and Dimming	
Dimmable	No
Mechanical and Housing	
Housing Color	White
Mech. impact protection code	IK03
Approval and Application	
Ambient temperature range	-20 to +40 °C
CE mark	Yes
Flammability mark	For mounting on normally flammable surfaces
Initial Performance (IEC Compliant)	
Luminous flux tolerance	+/-10%

General Information

Order Code	Full Product Name	Number of gear units
929003251432	DN065B G4 LED20/830_840_865 19W D200 RD	-
929003250532	DN065B G4 LED12/830 12W 220-240V D150 RD	-
929003250632	DN065B G4 LED12/840 12W 220-240V D150 RD	-
929003250832	DN065B G4 LED20/830 19W 220-240V D200 RD	-
929003250932	DN065B G4 LED20/840 19W 220-240V D200 RD	-
929004083532	DN065B G4 12S/830_840_865 PSU-E D150 RD	1 unit
929004083632	DN065B G4 20S/830_840_865 PSU-E D200 RD	1 unit
929003251332	DN065B G4 LED12/830_840_865 12W D150 RD	-
929003251532	DN065C G4 LED12/830 12W 220-240V 6-D175	-
929003251632	DN065C G4 LED12/840 12W 220-240V 6-D175	-
929003251732	DN065C G4 LED20/830 19W 220-240V 8-D225	-
929003251832	DN065C G4 LED20/840 19W 220-240V 8-D225	-
929003251132	DN065B G4 LED12/830 12W 220-240V L150 SQ	-
929003251232	DN065B G4 LED12/840 12W 220-240V L150 SQ	-
929004128832	DN065B G4 12S/830_840_865 PSU-E D150 PG	1 unit
929004128932	DN065B G4 20S/830_840_865 PSU-E D200 PG	1 unit

Light Technical (1/2)

Order Code	Full Product Name	All-in Type	Correlated Color Temperature (Nom)	Luminous Efficacy (rated) (Nom)	Luminous Flux
929003251432	DN065B G4 LED20/830_840_865 19W D200 RD	All-in, Multi Color Temperature	3000 K	105 lm/W	2,000 lm
929003250532	DN065B G4 LED12/830 12W 220-240V D150 RD	-	3000 K	100 lm/W	1,200 lm
929003250632	DN065B G4 LED12/840 12W 220-240V D150 RD	-	4000 K	100 lm/W	1,200 lm
929003250832	DN065B G4 LED20/830 19W 220-240V D200 RD	-	3000 K	105 lm/W	2,000 lm
929003250932	DN065B G4 LED20/840 19W 220-240V D200 RD	-	4000 K	105 lm/W	2,000 lm
929004083532	DN065B G4 12S/ 830_840_865 PSU-E D150 RD	-	3000 K	100 lm/W	1,200 lm
929004083632	DN065B G4 20S/ 830_840_865 PSU-E D200 RD	-	3000 K	105 lm/W	2,000 lm
929003251332	DN065B G4 LED12/830_840_865 12W D150 RD	All-in, Multi Color Temperature	3000 K	100 lm/W	1,200 lm

Order Code	Full Product Name	All-in Type	Correlated Color Temperature (Nom)	Luminous Efficacy (rated) (Nom)	Luminous Flux
929003251532	DN065C G4 LED12/830 12W 220-240V 6-D175	-	3000 K	100 lm/W	1,200 lm
929003251632	DN065C G4 LED12/840 12W 220-240V 6-D175	-	4000 K	108 lm/W	1,200 lm
929003251732	DN065C G4 LED20/830 19W 220-240V 8-D225	-	3000 K	105 lm/W	2,000 lm
929003251832	DN065C G4 LED20/840 19W 220-240V 8-D225	-	4000 K	105 lm/W	2,000 lm
929003251132	DN065B G4 LED12/830 12W 220-240V L150 SQ	-	3000 K	100 lm/W	1,200 lm
929003251232	DN065B G4 LED12/840 12W 220-240V L150 SQ	-	4000 K	100 lm/W	1,200 lm
929004128832	DN065B G4 12S/ 830_840_865 PSU-E D150 PG	-	3000 K	100 lm/W	1,200 lm
929004128932	DN065B G4 20S/ 830_840_865 PSU-E D200 PG	-	3000 K	105 lm/W	2,000 lm

Light Technical (2/2)

Order Code	Full Product Name	Optic type
929003251432	DN065B G4 LED20/830_840_865 19W D200 RD	Beam angle 110°
929003250532	DN065B G4 LED12/830 12W 220-240V D150 RD	Beam angle 110°
929003250632	DN065B G4 LED12/840 12W 220-240V D150 RD	Beam angle 110°
929003250832	DN065B G4 LED20/830 19W 220-240V D200 RD	Beam angle 110°
929003250932	DN065B G4 LED20/840 19W 220-240V D200 RD	Beam angle 110°
929004083532	DN065B G4 12S/830_840_865 PSU-E D150 RD	Beam angle 100°
929004083632	DN065B G4 20S/830_840_865 PSU-E D200 RD	Beam angle 100°
929003251332	DN065B G4 LED12/830_840_865 12W D150 RD	Beam angle 110°

Order Code	Full Product Name	Optic type
929003251532	DN065C G4 LED12/830 12W 220-240V 6-D175	Beam angle 110°
929003251632	DN065C G4 LED12/840 12W 220-240V 6-D175	Beam angle 110°
929003251732	DN065C G4 LED20/830 19W 220-240V 8-D225	Beam angle 110°
929003251832	DN065C G4 LED20/840 19W 220-240V 8-D225	Beam angle 110°
929003251132	DN065B G4 LED12/830 12W 220-240V L150 SQ	Beam angle 110°
929003251232	DN065B G4 LED12/840 12W 220-240V L150 SQ	Beam angle 110°
929004128832	DN065B G4 12S/830_840_865 PSU-E D150 PG	Beam angle 100°
929004128932	DN065B G4 20S/830_840_865 PSU-E D200 PG	Beam angle 100°

Operating and Electrical

Order Code	Full Product Name	Line Frequency	Power Consumption	Suitable for random switching
929003251432	DN065B G4 LED20/830_840_865 19W D200 RD	50 or 60 Hz	19 W	-
929003250532	DN065B G4 LED12/830 12W 220-240V D150 RD	50 or 60 Hz	12 W	-

Order Code	Full Product Name	Line Frequency	Power Consumption	Suitable for random switching
929003250632	DN065B G4 LED12/840 12W 220-240V D150 RD	50 or 60 Hz	12 W	-
929003250832	DN065B G4 LED20/830 19W 220-240V D200 RD	50 or 60 Hz	19 W	-
929003250932	DN065B G4 LED20/840 19W 220-240V D200 RD	50 or 60 Hz	19 W	-

Order Code	Full Product Name	Line Frequency	Power Consumption	Suitable for random switching
929004083532	DN065B G4 12S/ 830_840_865 PSU-E D150 RD	-	12 W	Not applicable
929004083632	DN065B G4 20S/ 830_840_865 PSU-E D200 RD	-	19 W	Not applicable
929003251332	DN065B G4 LED12/830_840_865 12W D150 RD	50 or 60 Hz	12 W	-
929003251532	DN065C G4 LED12/830 12W 220-240V 6-D175	50 or 60 Hz	12 W	-
929003251632	DN065C G4 LED12/840 12W 220-240V 6-D175	50 or 60 Hz	12 W	-
929003251732	DN065C G4 LED20/830 19W 220-240V 8-D225	50 or 60 Hz	19 W	-
929003251832	DN065C G4 LED20/840 19W 220-240V 8-D225	50 or 60 Hz	19 W	-
929003251132	DN065B G4 LED12/830 12W 220-240V L150 SQ	50 or 60 Hz	12 W	-
929003251232	DN065B G4 LED12/840 12W 220-240V L150 SQ	50 or 60 Hz	12 W	-
929004128832	DN065B G4 12S/ 830_840_865 PSU-E D150 PG	-	12 W	Not applicable
929004128932	DN065B G4 20S/ 830_840_865 PSU-E D200 PG	-	19 W	Not applicable

Mechanical and Housing

Order Code	Full Product Name	Ingress protection code
929003251432	DN065B G4 LED20/830_840_865 19W D200 RD	IP20/44
929003250532	DN065B G4 LED12/830 12W 220-240V D150 RD	IP20/44
929003250632	DN065B G4 LED12/840 12W 220-240V D150 RD	IP20/40
929003250832	DN065B G4 LED20/830 19W 220-240V D200 RD	IP20/40
929003250932	DN065B G4 LED20/840 19W 220-240V D200 RD	IP20/40
929004083532	DN065B G4 12S/830_840_865 PSU-E D150 RD	IP20/44
929004083632	DN065B G4 20S/830_840_865 PSU-E D200 RD	IP20/44
929003251332	DN065B G4 LED12/830_840_865 12W D150 RD	IP20/44
929003251532	DN065C G4 LED12/830 12W 220-240V 6-D175	IP20/40
929003251632	DN065C G4 LED12/840 12W 220-240V 6-D175	IP20/40
929003251732	DN065C G4 LED20/830 19W 220-240V 8-D225	IP20/40
929003251832	DN065C G4 LED20/840 19W 220-240V 8-D225	IP20/40
929003251132	DN065B G4 LED12/830 12W 220-240V L150 SQ	IP20/40
929003251232	DN065B G4 LED12/840 12W 220-240V L150 SQ	IP20/40
929004128832	DN065B G4 12S/830_840_865 PSU-E D150 PG	IP20/44
929004128932	DN065B G4 20S/830_840_865 PSU-E D200 PG	IP20/44

Emergency Operation

Order Code	Full Product Name	Emergency lighting
929003251432	DN065B G4 LED20/830_840_865 19W D200 RD	-
929003250532	DN065B G4 LED12/830 12W 220-240V D150 RD	-
929003250632	DN065B G4 LED12/840 12W 220-240V D150 RD	-
929003250832	DN065B G4 LED20/830 19W 220-240V D200 RD	-
929003250932	DN065B G4 LED20/840 19W 220-240V D200 RD	-
929004083532	DN065B G4 12S/830_840_865 PSU-E D150 RD	Emergency lighting ready (through compatible battery kit accessory)
929004083632	DN065B G4 20S/830_840_865 PSU-E D200 RD	Emergency lighting ready (through compatible battery kit accessory)
929003251332	DN065B G4 LED12/830_840_865 12W D150 RD	-
929003251532	DN065C G4 LED12/830 12W 220-240V 6-D175	-
929003251632	DN065C G4 LED12/840 12W 220-240V 6-D175	-
929003251732	DN065C G4 LED20/830 19W 220-240V 8-D225	-
929003251832	DN065C G4 LED20/840 19W 220-240V 8-D225	-
929003251132	DN065B G4 LED12/830 12W 220-240V L150 SQ	-
929003251232	DN065B G4 LED12/840 12W 220-240V L150 SQ	-
929004128832	DN065B G4 12S/830_840_865 PSU-E D150 PG	-
929004128932	DN065B G4 20S/830_840_865 PSU-E D200 PG	-

Approval and Application

Order Code	Full Product Name	Glow-wire test	Flickering value (PstLM) - Flickering value as per EN 61000-3-3	Stroboscopic effect visibility measure (SVM)
929003251432	DN065B G4 LED20/830_840_865 19W D200 RD	-	0.7	0.4
929003250532	DN065B G4 LED12/830 12W 220-240V D150 RD	-	0.7	0.4
929003250632	DN065B G4 LED12/840 12W 220-240V D150 RD	-	0.7	0.4
929003250832	DN065B G4 LED20/830 19W 220-240V D200 RD	-	0.7	0.4
929003250932	DN065B G4 LED20/840 19W 220-240V D200 RD	-	0.7	0.4
929004083532	DN065B G4 12S/ 830_840_865 PSU-E D150 RD	Temperature 650 °C, duration 30 s	0.9	0.3
929004083632	DN065B G4 20S/ 830_840_865 PSU-E D200 RD	Temperature 650 °C, duration 30 s	0.9	0.3
929003251332	DN065B G4 LED12/830_840_865 12W D150 RD	-	0.7	0.4

Order Code	Full Product Name	Glow-wire test	Flickering value (PstLM) - Flickering value as per EN 61000-3-3	Stroboscopic effect visibility measure (SVM)
929003251532	DN065C G4 LED12/830 12W 220-240V 6-D175	-	0.7	0.4
929003251632	DN065C G4 LED12/840 12W 220-240V 6-D175	-	0.7	0.4
929003251732	DN065C G4 LED20/830 19W 220-240V 8-D225	-	0.7	0.4
929003251832	DN065C G4 LED20/840 19W 220-240V 8-D225	-	0.7	0.4
929003251132	DN065B G4 LED12/830 12W 220-240V L150 SQ	-	0.7	0.4
929003251232	DN065B G4 LED12/840 12W 220-240V L150 SQ	-	0.7	0.4
929004128832	DN065B G4 12S/ 830_840_865 PSU-E D150 PG	Temperature 650 °C, duration 30 s	0.9	0.3
929004128932	DN065B G4 20S/ 830_840_865 PSU-E D200 PG	Temperature 650 °C, duration 30 s	0.9	0.3

Initial Performance (IEC Compliant)

Order Code	Full Product Name	Initial chromaticity
929003251432	DN065B G4 LED20/830_840_865 19W D200 RD	(0.44, 0.403) SDCM≤5
929003250532	DN065B G4 LED12/830 12W 220-240V D150 RD	(0.44, 0.403) SDCM≤5
929003250632	DN065B G4 LED12/840 12W 220-240V D150 RD	(0.38, 0.38) SDCM≤5
929003250832	DN065B G4 LED20/830 19W 220-240V D200 RD	(0.44, 0.403) SDCM≤5
929003250932	DN065B G4 LED20/840 19W 220-240V D200 RD	(0.38, 0.38) SDCM≤5
929004083532	DN065B G4 12S/830_840_865 PSU-E D150 RD	(ANSI3000K, 0.4339;, 0.4033 ; 4000K0.3761;0.3658 ; ANSI6500K0.3123;0.3283) 5SDCM
929004083632	DN065B G4 20S/830_840_865 PSU-E D200 RD	(ANSI3000K, 0.4339;, 0.4033 ; 4000K0.3761;0.3658 ; ANSI6500K0.3123;0.3283) 5SDCM
929003251332	DN065B G4 LED12/830_840_865 12W D150 RD	(0.44, 0.403) SDCM≤5
929003251532	DN065C G4 LED12/830 12W 220-240V 6-D175	(0.44, 0.403) SDCM≤5

Order Code	Full Product Name	Initial chromaticity
929003251632	DN065C G4 LED12/840 12W 220-240V 6-D175	(0.38, 0.38) SDCM≤5
929003251732	DN065C G4 LED20/830 19W 220-240V 8-D225	(0.44, 0.403) SDCM≤5
929003251832	DN065C G4 LED20/840 19W 220-240V 8-D225	(0.38, 0.38) SDCM≤5
929003251132	DN065B G4 LED12/830 12W 220-240V L150 SQ	(0.44, 0.403) SDCM≤5
929003251232	DN065B G4 LED12/840 12W 220-240V L150 SQ	(0.38, 0.38) SDCM≤5
929004128832	DN065B G4 12S/830_840_865 PSU-E D150 PG	(ANSI3000K, 0.4339;, 0.4033 ; 4000K0.3761;0.3658 ; ANSI6500K0.3123;0.3283) 5SDCM
929004128932	DN065B G4 20S/830_840_865 PSU-E D200 PG	(ANSI3000K, 0.4339;, 0.4033 ; 4000K0.3761;0.3658 ; ANSI6500K0.3123;0.3283) 5SDCM

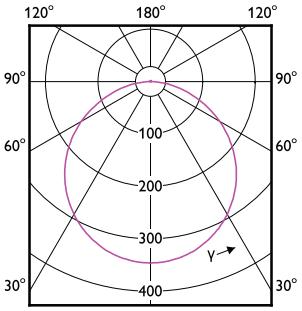
120° 180° 120°
90° 90°
60° 60°
30° 30°
100
200
300
400
γ
(cd/1000lm) 0°

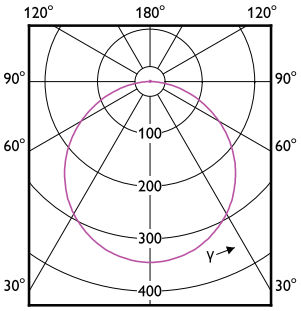
120° 180° 120°
90° 90°
60° 60°
30° 30°
100
200
300
400
γ
(cd/1000lm) 0°

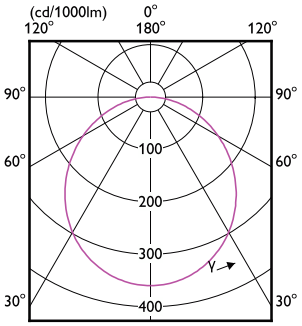
120° 180° 120°
90° 90°
60° 60°
30° 30°
100
200
300
400
γ
(cd/1000lm) 0°

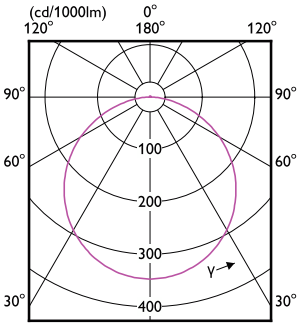
120° 180° 120°
90° 90°
60° 60°
30° 30°
100
200
300
400
γ
(cd/1000lm) 0°

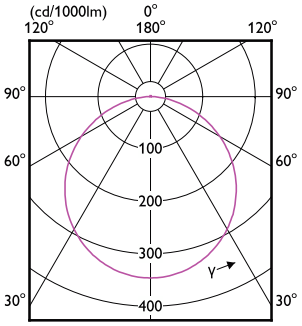
120° 180° 120°
90° 90°
60° 60°
30° 30°
100
200
300
400
γ
(cd/1000lm) 0°

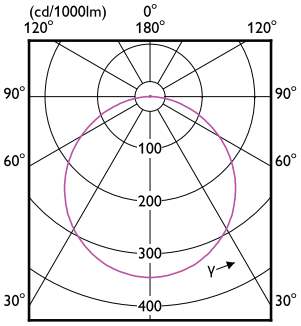
120° 180° 120°
90° 90°
60° 60°
30° 30°
100
200
300
400
γ
(cd/1000lm) 0°

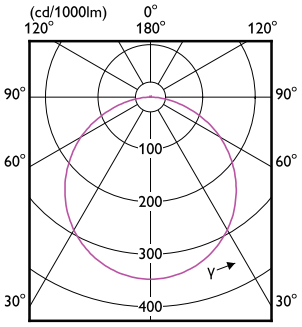
120° 180° 120°
90° 90°
60° 60°
30° 30°
100
200
300
400
γ
(cd/1000lm) 0°

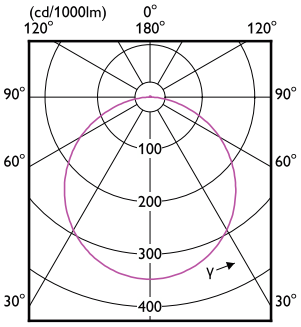
120° 180° 120°
90° 90°
60° 60°
30° 30°
100
200
300
400
γ
(cd/1000lm) 0°

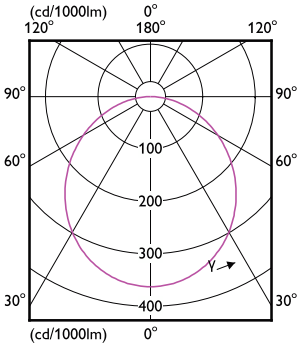
120° 180° 120°
90° 90°
60° 60°
30° 30°
100
200
300
400
γ
(cd/1000lm) 0°

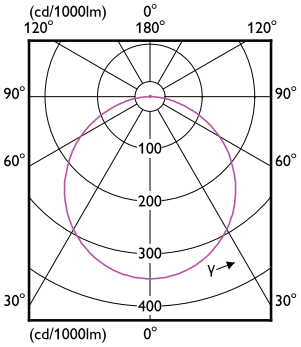
120° 180° 120°
90° 90°
60° 60°
30° 30°
100
200
300
400
γ
(cd/1000lm) 0°

Ledinaire SlimDownlight

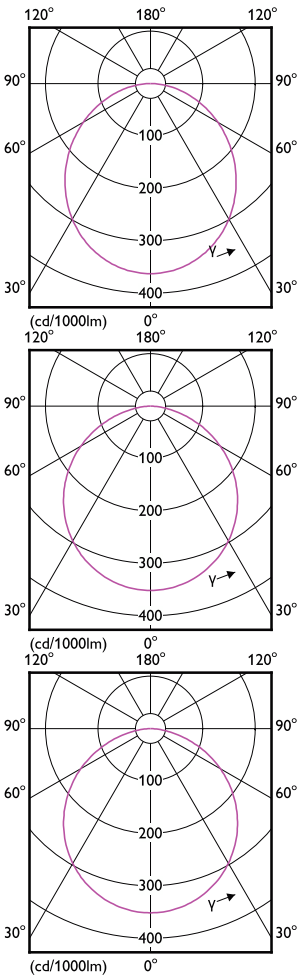

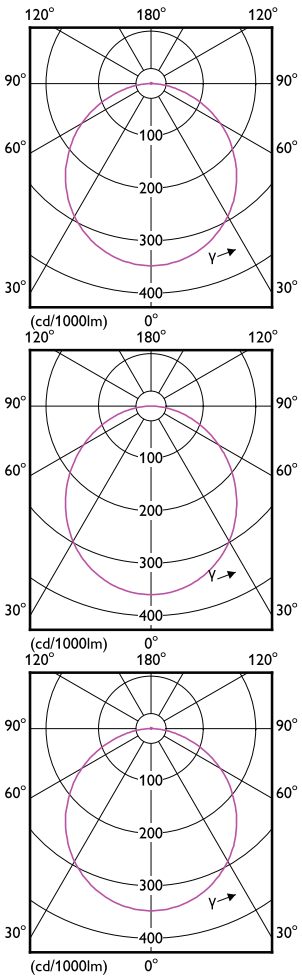

© 2025 Signify Holding All rights reserved. Signify does not give any representation or warranty as to the accuracy or completeness of the information included herein and shall not be liable for any action in reliance thereon. The information presented in this document is not intended as any commercial offer and does not form part of any quotation or contract, unless otherwise agreed by Signify. All trademarks are owned by Signify Holding or their respective owners.