PHILIPS

SM065C 41S/840 PSU W60L60 NOC 4PK

911401892385

Ledinaire surface-mounted SM065C, 34 W, 4100 lm, 4000 K

Steel, White, Signal white (RAL9003), Power supply unit external (On/Off), 4100 lm, 34 W, 120 lm/W, 4000 K, (0.38, 0.38) SDCM ≤5, Beam angle 120°, Opal, Acrylate, IP20/40 | Finger-protected;Wire-protected, IK02 | 0.2 J standard, Safety class II, 2×0.75mm², Flying leads/ wires

General Information

Number of gear units	1 unit
Driver included	Yes
Sustainability rating	Unclassified
Service tag	No
Value ladder	Value
Warranty period	5 years

Light Technical

Luminous Flux	4,100 lm
Correlated Color Temperature (Nom)	4000 K
Luminous Efficacy (rated) (Nom)	120 lm/W
Color rendering index (CRI)	>80
Beam angle of light source	120 degree(s)
Light source color	840 neutral white
Optic type	Beam angle 120°
Luminaire light beam spread	120°
Unified glare rating CEN	22

Operating and Electrical

Input Voltage	220 to 240 V
Line Frequency	50 or 60 Hz
Initial CLO power consumption	- W W
Average CLO power consumption	- W W
Inrush current	17.8 A
Inrush time	0.287 ms
Power Consumption	34 W
Power Factor (Fraction)	0.9
Connection	Flying leads/wires
Cable	2×0.75mm²
Number of products on MCB of 16 A type B	20
Suitable for random switching	Yes
Protection class IEC	Safety class II
Total harmonic distortion	20 %

Controls and Dimming

Dimmable	No
Driver/power unit/transformer	Power supply unit external (On/Off)
Control interface	-
Constant light output	No
Maximum dim level	Not applicable

Mechanical and Housing

Housing Material	Steel
Reflector material	Acrylate
Optic material	Polystyrene
Optical cover material	Acrylate
Fixation material	-
Housing Color	White
Optical cover finish	Opal
Overall length	595 mm
Overall width	595 mm
Overall height	40 mm
Dimensions (Height x Width x Depth)	40 x 595 x 595 mm
Ingress protection code	IP20/40 [Finger-protected;Wire-protected]
Mech. impact protection code	IK02 [0.2 J standard]
Net Weight (Piece)	1.600 kg

Emergency Operation

Central Emergency	No

Approval and Application

Glow-wire test	Temperature 650 °C, duration 30 s
Flammability mark	For mounting on normally flammable surfaces
CE mark	Yes
ENEC mark	-
Photobiological risk	Photobiological risk group 0 @200mm to EN62778
Photobiological risk specification	0.2 m
EU RoHS compliant	Yes
Performance ambient temperature Tq	25 °C
Flickering value (PstLM) - Flickering value as per EN 61000-3-3	1
Ambient temperature range	-10 to +35 °C

Initial Performance (IEC Compliant)

Luminous flux tolerance	-10% / +10%
Initial chromaticity	(0.38, 0.38) SDCM ≤5
Power consumption tolerance	+/-10%
Standard Deviation of Colour Matching (McAdam ellipse)	SDCM≤5

Over Time Performance (IEC Compliant)

Control gear failure rate at median useful life 50000 h	7.5 %
Lumen maintenance (EN-IEC 62722-2-1) at median useful life* 50000 h	L80
Lumen maintenance (EN-IEC 62722-2-1) at median useful life* 75000 h	L70

Sustainability Data

Repair class	Repair Class D, this product is not designed to be repaired.
Non-virgin material ratio of the packaging	Cardboard > 80% recycled
Packaging Recyclable content ratio	Cardboard recycling rate > 80%
Packaging Material	Cardboard

Product Data

Order product name	SM065C 41S/840 PSU W60L60 NOC 4PK
Full product name	SM065C 41S/840 PSU W60L60 NOC 4PK
Full product code	872016973691799
Order code	911401892385

Material Nr. (12NC)	911401892385
Numerator - Quantity Per Pack	1
EAN/UPC - Product/Case	8720169736917
Numerator - Packs per outer box	4
EAN/UPC - Case	8720169736917

Dimensional drawing

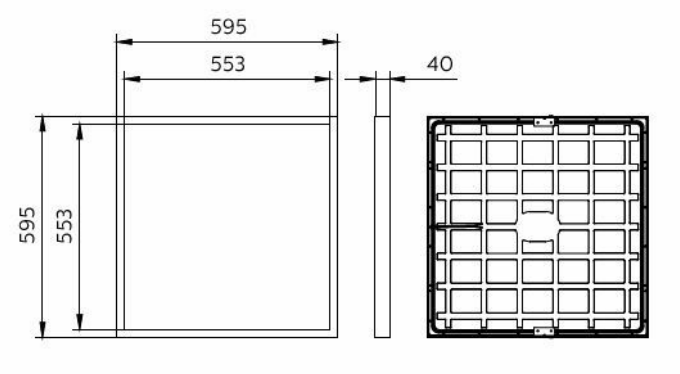

Related Documents

Documents and certificates	Document Name	Download
Installation Instructions	MI-SM065C-Ledinaire-surface-mounted-2024.pdf	Download

Photometry and lighting design	Document Name	Download
IES File	SM065C-41S-PSU-W60L60-NOC-1xLED.ies	Download

© 2026 Signify Holding. All rights reserved. The information provided herein is subject to change, without notice. Signify does not give any representation or warranty as to the accuracy or completeness of the information included herein and shall not be liable for any action in reliance thereon. The information presented in this document is not intended as any commercial offer and does not form part of any quotation or contract, unless otherwise agreed by Signify. Philips and the Philips Shield Emblem are registered trademarks of Koninklijke Philips N.V.