Signify myCreation

TCBRSM 390 19S/930 OC IA4 BK402 T102

912500110011



The remarkable and truly circular lighting solution where customizable design meets functionality

With a wide range of color and textures, Essential seamlessly blends into any decor, while providing functional lighting that meets office lighting requirements. Essential can be connected to other systems to create a smart office lighting solution with integrated sensors to avoid a ‘sensor acne’ in your beautifully designed ceilings. It comes in three sizes and can be mounted in three different ways. It offers a VPC (Visible Profile Ceiling) option for easy installation and provides perfect rimless ceiling integration. It offers numerous design options to meet your needs. It's 3D printed with recycled materials, making it a conscious choice for those looking to contribute to a circular economy. Essential has a high efficacy up to 152 lm/W. Choose this lighting solution without compromising on style, performance, functionality, or sustainability.

General Information

Number of gear units	1 unit
Sustainability rating	Unclassified
Value ladder	Specification
Warranty period	5 years

Light Technical

Luminous Flux	1,817 lm
Correlated Color Temperature (Nom)	3000 K
Luminous Efficacy (rated) (Nom)	118 lm/W
Color rendering index (CRI)	90
Light source color	930 warm white
Luminaire light beam spread	90°
Effective projected area	0.033150000000000006 m²

Operating and Electrical

Input Voltage	220-240 V
Line Frequency	50 Hz
Inrush current	6.7 A
Inrush time	0.030 ms
Power Consumption	15.4 W
Power Factor (Fraction)	0.9
Connection	Push-in connector with 2 poles and pull relief
Number of products on MCB of 16 A type B	100
Suitable for random switching	Yes (relates to presence/ movement detection and daylight harvesting)
Protection class IEC	Safety class II

Controls and Dimming

Dimmable	Wireless Dim
Driver/power unit/ transformer	Sensor ready driver Interact System ready

Mechanical and Housing

Housing Material	3D printed, BK402 Satin Black (9004)
Housing Color	Black
Overall height	85 mm
Overall diameter	390 mm
Nominal Ceiling cut-out diameter	390 mm
Ingress protection code	IP20 [Finger-protected]
Mech. impact protection code	IK04 [0.5 J standard plus]
Net Weight (Piece)	2.200 kg

Approval and Application

Glow-wire test	Temperature 650 °C, duration 30 s
CE mark	Yes
ENEC mark	ENEC mark
EU RoHS compliant	Yes
Performance ambient temperature Tq	25 °C
Ambient temperature range	+10 to +35 °C

Initial Performance (IEC Compliant)

Luminous flux tolerance	+/-10%
Initial chromaticity	(0.436, 0.402)
Power consumption tolerance	+/-10%

Product Data

Order product name	TCBRSM 390 19S/930 OC IA4 BK402 T102
Full product name	TCBRSM 390 19S/930 OC IA4 BK402 T102
Full product code	872016987690300
Order code	912500110011
Material Nr. (12NC)	912500110011
Numerator - Quantity Per Pack	1
EAN/UPC - Product/Case	8720169876903
Numerator - Packs per outer box	1
EAN/UPC - Case	8720169876903

Dimensional drawing

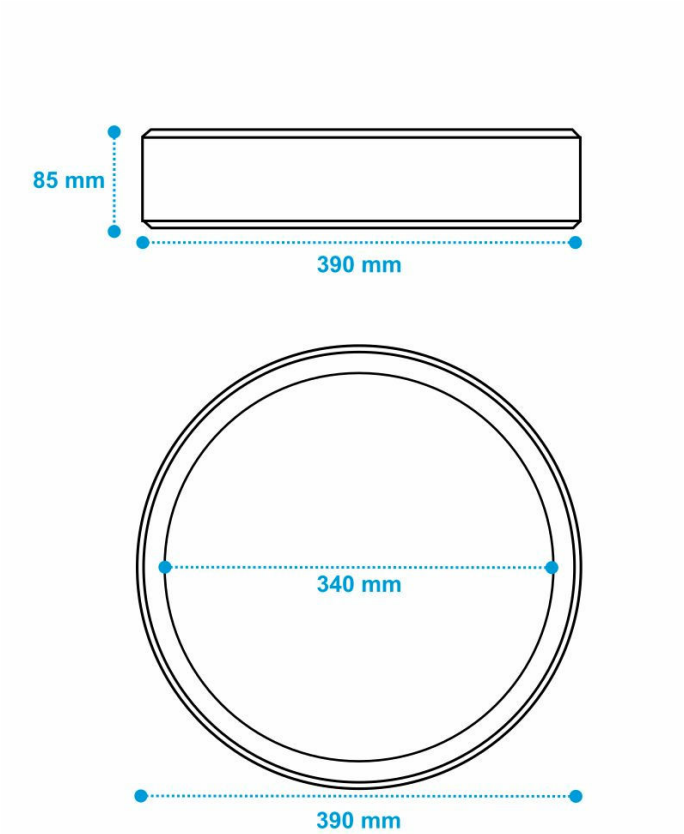

Related Documents

Documents and certificates	Document Name	Download
Installation Instructions	442294862218-Essential-Surface-mount.pdf	Download

© 2026 Signify Holding. All rights reserved. The information provided herein is subject to change, without notice. Signify does not give any representation or warranty as to the accuracy or completeness of the information included herein and shall not be liable for any action in reliance thereon. The information presented in this document is not intended as any commercial offer and does not form part of any quotation or contract, unless otherwise agreed by Signify. All trademarks are owned by Signify Holding or their respective owners.