PHILIPS

SP680P LED39S 6500 PSU WH L120 S1

919515811496

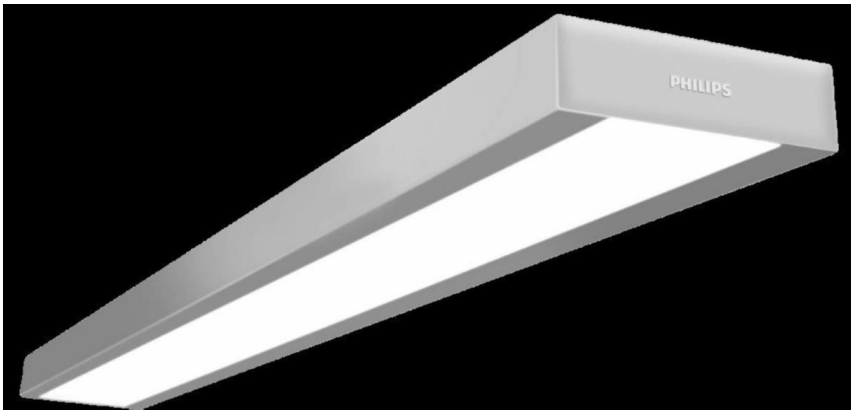

Continuous slim suspended linear office Luminire: Performanc and Elegance

The PureLine family of luminaires gives you compromise-free office illumination. It is a perfect solution for office application and general indoor area lighting . The range brings together high-flux lighting with a homogeneous optical system without making any concessions on energy efficiency design.

Warnings and Safety

- Meant for use in Indoor environment only

General Information

Driver included	Yes
Light source engine type	LED
Warranty period	3 years

Light Technical

Luminous Flux	3,900 lm
Correlated Color Temperature (Nom)	6500 K
Luminous Efficacy (rated) (Nom)	100 lm/W
Color rendering index (CRI)	>80
Beam angle of light source	120 degree(s)
Light source color	865 cool daylight
Optic type	-
Luminaire light beam spread	120°

Operating and Electrical

Input Voltage	220-240 V
Line Frequency	50 Hz
Power Consumption	38 W
Power Factor (Fraction)	0.9
Protection class IEC	Safety class I
Surge Protection (Common/ Differential)	2.5 kV kV

Controls and Dimming

Dimmable	No
Control interface	-

Mechanical and Housing

Housing Material	Aluminum extruded
Optic material	Polycarbonate
Optical cover material	Polycarbonate
Housing Color	White
Mounting device	Suspension set simple, standard
Overall length	1,156 mm
Overall width	150 mm
Overall height	43 mm
Dimensions (Height x Width x Depth)	43 x 150 x 1156 mm
Material	Aluminum
Ingress protection code	IP20 [Finger-protected]
Mech. impact protection code	IK02 [0.2 J standard]
Optical cover type	Polycarbonate
Net Weight (Piece)	2.500 kg

Approval and Application

Flammability mark	For mounting on normally flammable surfaces
Ambient temperature range	0 to +45 °C

Dimensional drawing

Product : Pureline Suspended
Type : SP680
Application: Indoor

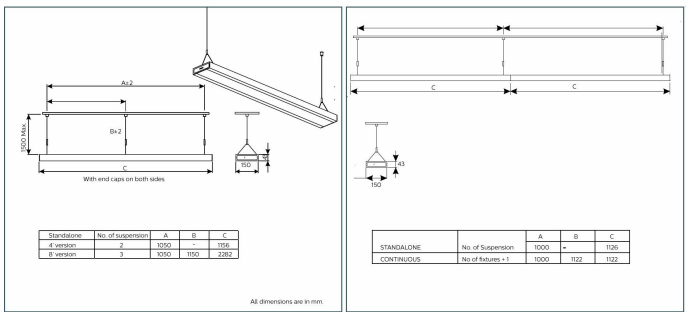

Standalone	No. of suspension	A	B	C
A' version	2	1050	-	1156
B' version	3	1050	1150	2282

	No. of Suspension	A	B	C
STANDALONE		1000	-	1126
CONTINUOUS	No of fixtures + 1	1000	1122	1122

Initial Performance (IEC Compliant)

Power consumption tolerance	+/-10%

Over Time Performance (IEC Compliant)

Median useful life L70B50	50,000 hour(s)

Product Data

Order product name	SP680P LED39S 6500 PSU WH L120 S1
Full product name	SP680P LED39S 6500 PSU WH L120 S1
Order code	919515811496
Material Nr. (12NC)	919515811496
Numerator - Quantity Per Pack	1
Numerator - Packs per outer box	1

© 2026 Signify Holding. All rights reserved. The information provided herein is subject to change, without notice. Signify does not give any representation or warranty as to the accuracy or completeness of the information included herein and shall not be liable for any action in reliance thereon. The information presented in this document is not intended as any commercial offer and does not form part of any quotation or contract, unless otherwise agreed by Signify. Philips and the Philips Shield Emblem are registered trademarks of Koninklijke Philips N.V.