PHILIPS

GreenUp Waterproof

2933255



Energy-efficient lighting for industrial and commercial applications

GreenUp Waterproof is a high efficient and reliable LED luminaire, designed for industrial application with humid and dust protection requirement. It delivers significant energy savings of up to 62% as compared to conventional dual-T8 waterproof. Utilization of UV-shield PC and extrusion process makes it suitable for semi-outdoor environments, and together with the built-in breather ensure a sound performance. With professional optic design and Philips LED module gives the most comfortable light experience of CRI 85.

Benefits

- High energy efficient
- Long lifetime
- Flexible installation

Applications

- Industry
- Corridors / walkways
- Indoor car parks

Features

- System efficacy of 120lm/W
- 50,000hrs L70 lifetime

Versions



GreenUp Waterproof G2



GreenUp Waterproof G2



GreenUp Waterproof G2

Dimensional drawing

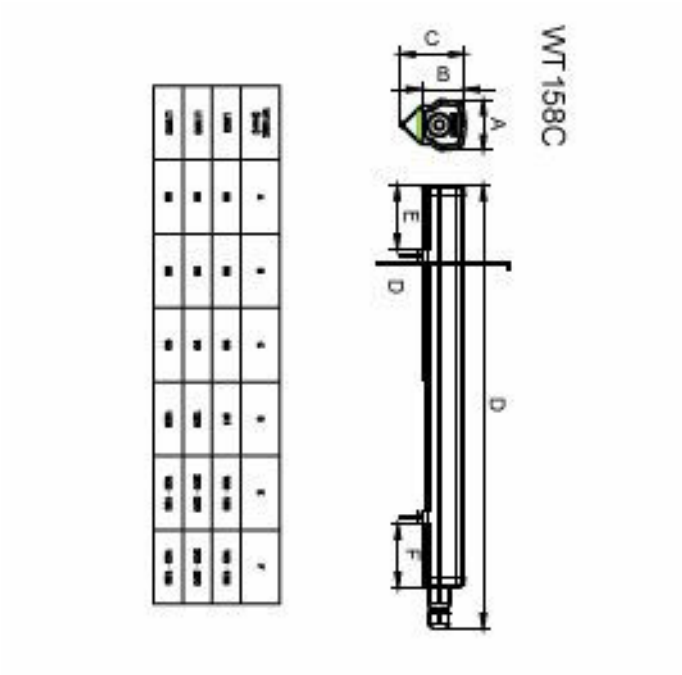

GreenUp Waterproof G2

General Information

Driver included	Yes

Light Technical

Luminous Efficacy (rated) (Nom)	120 lm/W
Color rendering index (CRI)	>80

Operating and Electrical

Input Voltage	220 to 240 V
Line Frequency	50 or 60 Hz
Protection class IEC	Safety class II

Controls and Dimming

Dimmable	No

Mechanical and Housing

Housing Color	Gray and white
Ingress protection code	IP66 [Dust penetration-protected, jet-proof]
Mech. impact protection code	IK08 [5 J vandal-protected]
Optical cover type	-

Approval and Application

CE mark	No
Ambient temperature range	-20 to +45 °C

Initial Performance (IEC Compliant)

Luminous flux tolerance	+/-10%

Light Technical

Order Code	Full Product Name	Luminous Flux	Correlated Color Temperature (Nom)
911401894180	WT158C LED36S/840 PSU L1200 GC	3,600 lm	4000 K
911401894280	WT158C LED36S/840 PSU TW1 L1200 GC	3,600 lm	4000 K
911401894780	WT158C LED36S/865 PSU L1200 GC	3,600 lm	6500 K
911401894880	WT158C LED36S/865 PSU TW1 L1200 GC	3,600 lm	6500 K
911401895180	WT158C LED25S/840 PSU L1200 GC	2,500 lm	4000 K
911401895580	WT158C LED36S/840 PSU L1200 GM	3,600 lm	4000 K
911401896180	WT158C LED36S/865 PSU L1200 GM	3,600 lm	6500 K
911401896280	WT158C LED36S/865 PSU TW1 L1200 GM	3,600 lm	6500 K
911401896580	WT158C LED25S/840 PSU L1200 GM	2,500 lm	4000 K
911401894380	WT158C LED56S/840 PSU L1500 GC	5,600 lm	4000 K
911401894980	WT158C LED56S/865 PSU L1500 GC	5,600 lm	6500 K
911401895080	WT158C LED56S/865 PSU TW1 L1500 GC	5,600 lm	6500 K
911401895780	WT158C LED56S/840 PSU L1500 GM	5,600 lm	4000 K
911401896380	WT158C LED56S/865 PSU L1500 GM	5,600 lm	6500 K
911401894080	WT158C LED18S/840 PSU TW1 L600 GC	1,800 lm	4000 K

Order Code	Full Product Name	Luminous Flux	Correlated Color Temperature (Nom)
911401894580	WT158C LED18S/865 PSU L600 GC	1,800 lm	6500 K
911401895380	WT158C LED18S/840 PSU L600 GM	1,800 lm	4000 K
911401895980	WT158C LED18S/865 PSU L600 GM	1,800 lm	6500 K

Operating and Electrical

Order Code	Full Product Name	Power Consumption
911401894180	WT158C LED36S/840 PSU L1200 GC	30 W
911401894280	WT158C LED36S/840 PSU TW1 L1200 GC	30 W
911401894780	WT158C LED36S/865 PSU L1200 GC	30 W
911401894880	WT158C LED36S/865 PSU TW1 L1200 GC	30 W
911401895180	WT158C LED25S/840 PSU L1200 GC	20 W
911401895580	WT158C LED36S/840 PSU L1200 GM	30 W
911401896180	WT158C LED36S/865 PSU L1200 GM	30 W
911401896280	WT158C LED36S/865 PSU TW1 L1200 GM	30 W
911401896580	WT158C LED25S/840 PSU L1200 GM	20 W
911401894380	WT158C LED56S/840 PSU L1500 GC	46 W
911401894980	WT158C LED56S/865 PSU L1500 GC	46 W
911401895080	WT158C LED56S/865 PSU TW1 L1500 GC	46 W
911401895780	WT158C LED56S/840 PSU L1500 GM	46 W
911401896380	WT158C LED56S/865 PSU L1500 GM	46 W
911401894080	WT158C LED18S/840 PSU TW1 L600 GC	15 W
911401894580	WT158C LED18S/865 PSU L600 GC	15 W
911401895380	WT158C LED18S/840 PSU L600 GM	15 W
911401895980	WT158C LED18S/865 PSU L600 GM	15 W

© 2026 Signify Holding. All rights reserved. The information provided herein is subject to change, without notice. Signify does not give any representation or warranty as to the accuracy or completeness of the information included herein and shall not be liable for any action in reliance thereon. The information presented in this document is not intended as any commercial offer and does not form part of any quotation or contract, unless otherwise agreed by Signify. Philips and the Philips Shield Emblem are registered trademarks of Koninklijke Philips N.V.