PHILIPS

## Essential Surface

10893124



# Essential: The remarkable and truly circular lighting solution

Philips Essential is a functional surface mount round luminaire with a wide range of color and textures, which can seamlessly blend into any decor, while meeting office lighting requirements. It can be connected to other systems to create a smart office lighting solution with integrated sensors to avoid a ‘sensor acne’ in your beautifully designed ceilings. This family is available in 3 sizes and can be mounted in 3 different ways. Philips Essential is made from recycled materials, 3D printed carbon neutral, making it a conscious choice for those looking to contribute to a circular economy. So, choose this lighting solution without compromising on style, performance, functionality, or sustainability.

### Benefits

- Fabric-inspired textures & colors to match interior styles and to meet design requirements
- Low weight and easy to install
- Save electricity costs with high efficiency
- Office compliant with UGR19 versions
- Clean & beautiful ceilings with integrated sensing options for daylight control, presence detection and more.
- Suitable for various project needs

## Applications

- Offices
- Healthcare
- Hospitality
- Retail

## Features

- A wide range of colors and textures
- 3 sizes and 3 mounting types (pendant, surface and recessed)
- Includes VPC option for easy installation and perfect rimless ceiling integration
- Efficacy up to 152 lm/W
- DALI or wireless drivers with Interact ready
- Printed parts with at least 55% recycled or mass balanced bio-circular material
- Luminous flux 900 - 8000 lm
- Lifetime 100,000hrs to L80
- Integrated Sensor option with presence detection and day light dimming

## Versions

Essential Surface RTP



Essential Surface RTP



Essential Surface RTP



## Dimensional drawing

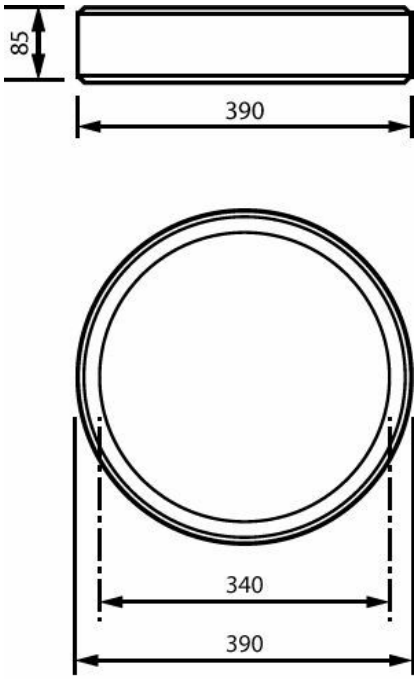


TCBRMS 19S/940 DIA OC WH401T102

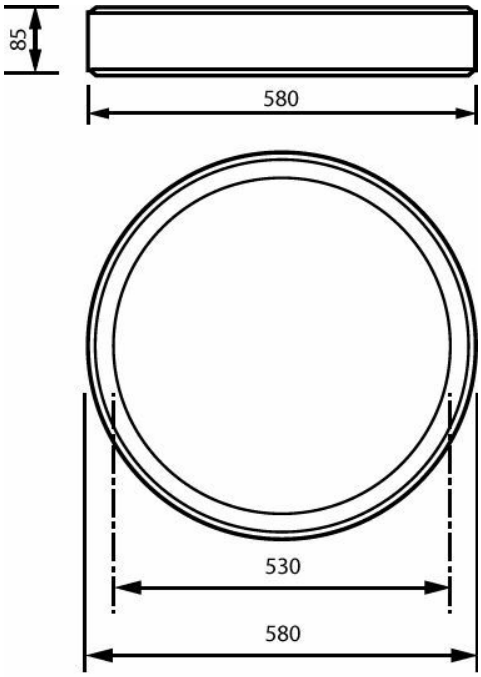


TCBRSM 580 46S/930 OC DIA  WH401 T102

### General Information

| | |
|---|---|
| Number of gear units | 1 unit |
| Driver included | Yes |
| Service tag | Yes |

### Light Technical

| | |
|---|---|
| Color rendering index (CRI) | >90 |
| Beam angle of light source | 90 degree(s) |
| Optic type | Beam angle 90° |

### Operating and Electrical

| | |
|---|---|
| Input Voltage | 220/240 V |
| Line Frequency | 50 to 60 Hz |
| Protection class IEC | Safety class II |

### Controls and Dimming

| | |
|---|---|
| Dimmable | Yes |
| Embedded control | Interact SC1500 Multi-sensor bundle |

### Mechanical and Housing

| | |
|---|---|
| Housing Color | White |
| Ingress protection code | IP20 [Finger-protected] |
| Mech. impact protection code | IK04 [0.5 J standard plus] |

### Emergency Operation

| | |
|---|---|
| Central Emergency | No |

### Approval and Application

| | |
|---|---|
| Glow-wire test | Temperature 650 °C, duration 30 s |
| Flammability mark | - |
| CE mark | Yes |
| ENEC mark | ENEC mark |
| Ambient temperature range | +10 to +35 °C |

### Initial Performance (IEC Compliant)

| | |
|---|---|
| Luminous flux tolerance | -10% / +10% |

### Product Data

| | |
|---|---|
| Product family code | TCBRSM [Essential Surface Mount] |

## Light Technical

| Order Code | Full Product Name | Luminous Flux | Correlated Color Temperature (Nom) | Luminous Efficacy (rated) (Nom) |
|---|---|---|---|---|
| 912500108723 | TCBRSM 580 46S/930 OC DIA WH401 T102 | 4,416 lm | 3000 K | 128 lm/W |
| 912500108724 | TCBRLS 46S/940 DIA OC WH401T102 | 4,600 lm | 4000 K | 133 lm/W |
| 912500108727 | TCBRMS 19S/930 DIA OC WH401T102 | 1,817 lm | 3000 K | 118 lm/W |
| 912500108728 | TCBRMS 19S/940 DIA OC WH401T102 | 1,890 lm | 4000 K | 123 lm/W |
| 912500108781 | TCBRMS 19S/930 IA5 OC WH401T102 | 1,817 lm | 3000 K | 118 lm/W |

## Operating and Electrical

| Order Code | Full Product Name | Power Consumption | Suitable for random switching |
|---|---|---|---|
| 912500108723 | TCBRSM 580 46S/930 OC DIA WH401 T102 | 34.5 W | Yes |
| 912500108724 | TCBRLS 46S/940 DIA OC WH401T102 | 34.5 W | Yes |
| 912500108727 | TCBRMS 19S/930 DIA OC WH401T102 | 15.4 W | Yes |
| 912500108728 | TCBRMS 19S/940 DIA OC WH401T102 | 15.4 W | Yes |
| 912500108781 | TCBRMS 19S/930 IA5 OC WH401T102 | 15.4 W | Yes (relates to presence/ movement detection and daylight harvesting) |

## Initial Performance (IEC Compliant)

| Order Code | Full Product Name | Initial chromaticity |
|---|---|---|
| 912500108723 | TCBRSM 580 46S/930 OC DIA  WH401 T102 | (0.44, 0.40) SDCM < 3 |
| 912500108724 | TCBRLS 46S/940 DIA OC WH401T102 | (0.38, 0.38) SDCM < 3 |
| 912500108727 | TCBRMS 19S/930 DIA OC WH401T102 | (0.44, 0.40) SDCM < 3 |
| 912500108728 | TCBRMS 19S/940 DIA OC WH401T102 | (0.38, 0.38) SDCM < 3 |
| 912500108781 | TCBRMS 19S/930 IA5 OC WH401T102 | (0.44, 0.40) SDCM < 3 |

© 2026 Signify Holding. All rights reserved. The information provided herein is subject to change, without notice. Signify does not give any representation or warranty as to the accuracy or completeness of the information included herein and shall not be liable for any action in reliance thereon. The information presented in this document is not intended as any commercial offer and does not form part of any quotation or contract, unless otherwise agreed by Signify. Philips and the Philips Shield Emblem are registered trademarks of Koninklijke Philips N.V.