PHILIPS

WT050C
1xTLED WR L1200

911401812389



Ledinaire Waterproof Tube Housing

IP65 | Dust penetration-protected, jet-proof, IK08 | 5 J vandal-protected

General Information

Value ladder	Value

Mechanical and Housing

Overall length	1,280 mm
Overall width	69 mm
Overall height	70 mm
Overall diameter	0 mm
Dimensions (Height x Width x Depth)	70 x 69 x 1280 mm
Material	Polycarbonate
Ingress protection code	IP65 [Dust penetration-protected, jet-proof]
Mech. impact protection code	IK08 [5 J vandal-protected]
Accessory color	Gray
Net Weight (Piece)	0.850 kg

Approval and Application

CE mark	Yes
EU RoHS compliant	Yes

Sustainability Data

Non-virgin material ratio of the packaging	Cardboard > 80% recycled
Packaging Recyclable content ratio	Cardboard recycling rate > 80%
Packaging Material	Cardboard

Product Data

Order product name	WT050C 1xTLED WR L1200
Full product name	WT050C 1xTLED WR L1200
Full product code	872110371236399
Order code	911401812389
Material Nr. (12NC)	911401812389
Numerator - Quantity Per Pack	1
EAN/UPC - Product/Case	8721103712363
Numerator - Packs per outer box	12
EAN/UPC - Case	8721103712400

Dimensional drawing

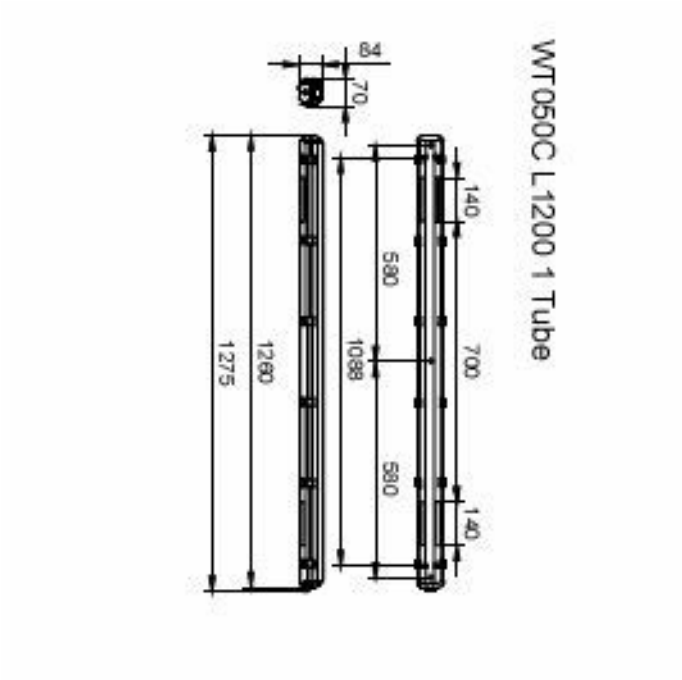

Related Documents

Documents and certificates	Document Name	Download
Installation Instructions	Installation-Instuction-WT050C-Ledinaire-waterproof-tube-housing-2026-06-FINAL.pdf	Download

© 2026 Signify Holding. All rights reserved. The information provided herein is subject to change, without notice. Signify does not give any representation or warranty as to the accuracy or completeness of the information included herein and shall not be liable for any action in reliance thereon. The information presented in this document is not intended as any commercial offer and does not form part of any quotation or contract, unless otherwise agreed by Signify. Philips and the Philips Shield Emblem are registered trademarks of Koninklijke Philips N.V.