Signify

Luma gen2

BGP701



Luma gen2: The standard in road lighting redefined, with UltraEfficient performance options

The Luma family is designed to deliver flexible, highly efficient, and sustainable lighting that adapts to the dynamic needs of every city. Luma gen2 preserves the distinctive design characteristics of the first generation while adding the benefits of the latest technology, including a future-proof System Ready architecture, a new LEDgine performance extension, and an optical platform that ensures best-in-class lighting performance in a broad range of applications. Luma gen2 also offers improved serviceability. Installation is eas y and fast, and Service tag gives you access to all relevant specs and product documentation onsite. The cable feed-through offers easy, top-down, tool-less access to the luminaire's gear components. Because Luma gen2 is System Ready, your can pair it with connected lighting management systems such as Interact, or with existing and future sensor innovations. Luma gen2 has been developed to optimize and simplify repairs and maintenance with a plug-and-play GearFlex module containing all electrical components in an easy-to-handle and accessible box inside the housing. Because sustainability is our focus, the GearFlex module uses post-industrial recycled material, The white frame around the LED engine uses post-industrial recycled material, and our product packaging minimizes plastic

waste. The product can be disassembled in only a few steps at end of life. As a company conscious of the impact of light on the environment and biodiversity, we equipped Luma gen2 luminaires with dedicated light recipes that help to protect ecosystems for bats and preserve the dark night sky.

Benefits

- Best-in-class efficiency and light performance in a broad range of applications
- Ease of repairs and maintenance via a dedicated GearFlex module
- Easy disassembly at end of life
- Future-ready thanks to the SR (System Ready) socket
- Luminaire is equipped with dedicated light recipes that help to maintain optimal ecosystems for bats, preserve the dark night sky, and reduce light pollution
- Equipped with Service tag, a QR-based identification system that makes each luminaire uniquely identifiable and provides maintenance, installation, and spare parts information on-site

Applications

- Motorways, inter-urban main roads, boulevards and avenues, roundabouts, pedestrian crossings
- Residential streets, side streets, squares, parks, cycle and pedestrian paths, playgrounds
- Parking areas, industrial areas, petrol stations, rail yards, airports, harbors, waterways

Features

- Dedicated GearFlex module enabling faster, safer, and tool-less maintenance
- Post-industrial recycled plastic material used in the GearFlex module and the white frame around the LED compartment
- >85% recyclable aluminum content
- Cable feed-through for easy installation
- Ready to be connected to Interact connected lighting management systems
- Ready to be paired with third-party lighting management systems and sensors
- Tilt with precision of 2.5 degrees
- Efficacy up to 200 lm /W for selected configurations
- Choice of 40+ different beams and different internal louvers
- flux optimization tool
- Surge protection up to 10 kV
- Wide range of lumen packages, ranging from 1,000 to 89,000 lm
- Various CCTs ranging from 1800K – 5700K

Versions

Luma gen2 Mini Compact with SR



Luma gen2 Nano with SR



Luma gen2 Micro with SR



Luma gen2 Large with SR



Luma gen2 Medium with SR



Luma gen2 Mini with SR



Dimensional drawing

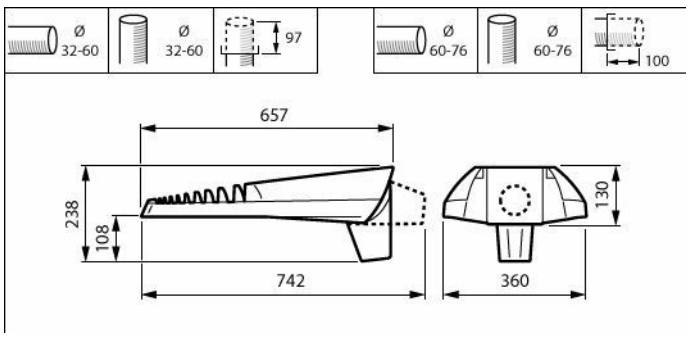

BGP704 LED100-4S/740 II DM32 MSP CLO-DDF

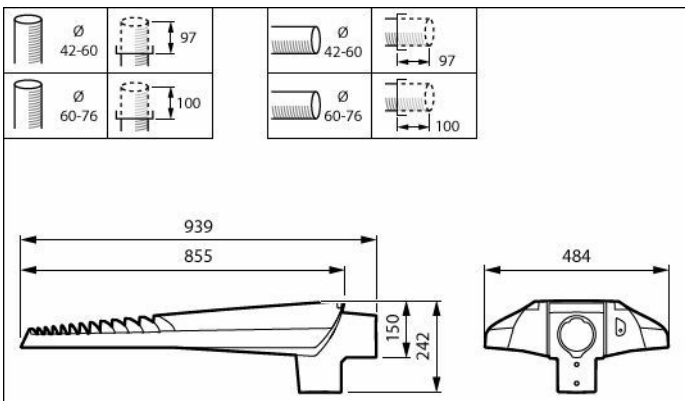

BGP705 LED300-4S/740 II DM32 MSP CLO SRT

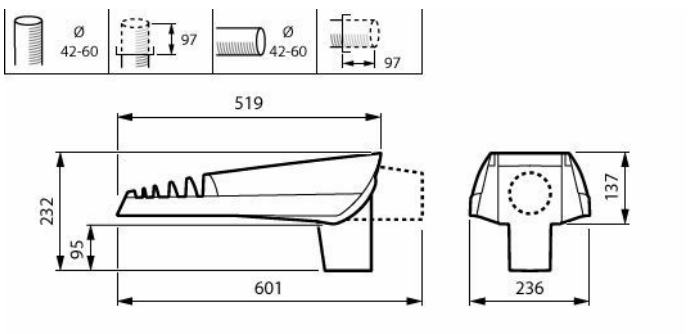

BGP701 LED8-4S/740 DM11 FG GR 42/60P

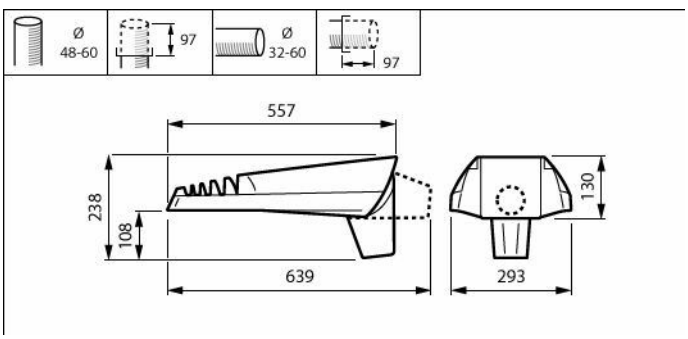

BGP702 LED60-1P/740 UE I DM11P SRTB GR 4

Data subject to change

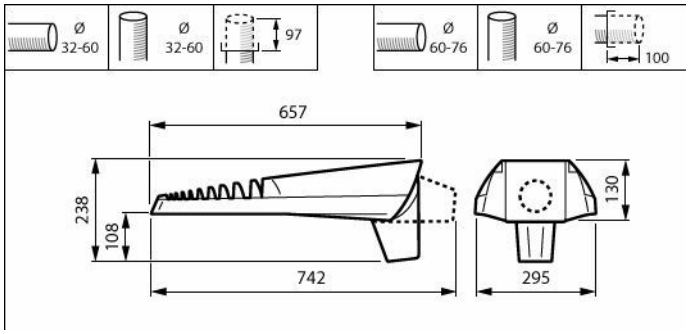

BGP703 LED120-1P/740 UE I DM11P SRTB GR

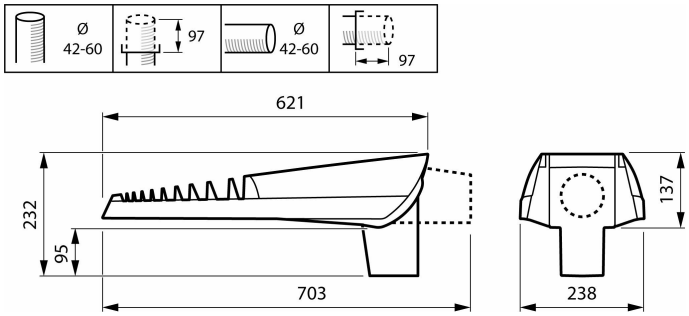

BGP713 LED100-4S/830 II DW50 GF SRT SRB

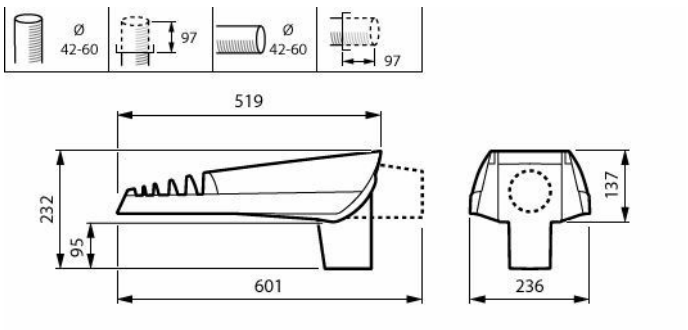

BGP701 LED60-4S/740 II DM11 CLO SRT SRB

Product details



BGP701 Luma gen2 Nano FG DPP



BGP701 Luma gen2 Nano Open2 DPP



BGP713 Luma gen2 Mini Compact Open1 DPP



BGP713 Luma gen2 Mini Compact Open2 DPP



BGP705 Luma gen2 Large Open1 DPP

General Information

Light source replaceable	Yes
Driver included	Yes
Service tag	Yes

Light Technical

Upward light output ratio	0

Mechanical and Housing

Ingress protection code	IP66 [Dust penetration-protected, jet-proof]
Optical cover type	Glass

Approval and Application

CE mark	Yes

Over Time Performance (IEC Compliant)

Driver failure rate at 5000 h	0.005 %

General Information

Order Code	Full Product Name	Lamp family code	Number of gear units
910925868406	BGP713 LED120-4S/740 DM50 GF SRT SRB 60	LED120-4S	1 unit
910925868407	BGP713 LED100-4S/830 II DW50 GF SRT SRB	LED100-4S	1 unit
910925868409	BGP713 LED50-4S/740 II DM11 GF EZR SRB 6	LED50-4S	1 unit
910925870011	BGP713 LED120-1P/740 UE I DM11P PSU 42/6	LED120-4S	1 unit
910925867324	BGP701 LED8-4S/740 DM11 FG GR 42/60P	LED8	1 unit
910925867325	BGP701 LED40-4S/740 DM10 GF SRT SRB 42/6	LED40	1 unit
910925868136	BGP701 LED60-4S/740 II DM11 CLO SRT SRB	LED60	1 unit
910925868225	BGP701 LED60-4S/740 II DM32 MSP CLO SRT	LED60	1 unit
910925868227	BGP701 LED40-4S/740 II DM10 MSP CLO SRT	LED40	1 unit
910925868799	BGP701 LED60-4S/730 DM11 DDF27 D18 SRG10	LED60	1 unit
910925870002	BGP701 LED60-1P/740 UE DM11P SRTB GR 42/	LED60	1 unit
910925866534	BGP702 LED60-4S/740 DM11 GF SRT SRB 60/7	LED60	1 unit
910925866535	BGP702 LED40-4S/740 DM10 GF SRT SRB 60/7	LED40	1 unit
910925866536	BGP702 LW10 LED50-4S/830 DM11 GF CTGO	LED50	1 unit
910925867784	BGP702 LED40-4S/740 II DM10 MSP CLO SRT	LED40	1 unit
910925867785	BGP702 LED60-4S/740 II DM32 MSP CLO SRT	LED60	1 unit
910925867786	BGP702 LED60-4S/740 II DM11 CLO SRT SRB	LED60	1 unit

Order Code	Full Product Name	Lamp family code	Number of gear units
910925867787	BGP702 LED60-4S/740 II DM11 CLO SRT SRB	LED60	1 unit
910925868042	BGP702 LED60-4S/740 DM11 PGR SRT SRB 60	LED60	1 unit
910925868043	BGP702 LED40-4S/740 DM10 PGR SRT SRB 60	LED40	1 unit
910925868044	BGP702 LW10 LED50-4S/830 DM11 PGR CTGO	LED50	1 unit
910925868801	BGP702 LED60-4S/730 DM11 DDF27 D18 SRG10	LED60	1 unit
910925870005	BGP702 LED60-1P/740 UE I DM11P SRTB GR 4	LED60	1 unit
910925867142	BGP705 LED150-4S/740 DM11 GF SRT SRB 60/	LED150	1 unit
910925867143	BGP705 LED300-4S/740 II DM11 GF SRT SRB	LED300	3 units
910925868226	BGP705 LED300-4S/740 II DM32 MSP CLO SRT	LED300	3 units
910925868804	BGP705 LED580-4S/730 DM11 DDF27 D18 SRG1	-	3 units
910925870017	BGP705 LED500-1P/740 UE I DM11P SRTB GR	LED500	1 unit
910925866542	BGP704 LED140-4S/740 DM50 GF SRT SRB 60	LED140	1 unit
910925866543	BGP704 LED210-4S/830 II DX10 GF D18 DDF3	LED210	1 unit
910925866544	BGP704 LW10 LED120-4S/830 DM11 GF CTGO	LED120	1 unit
910925868050	BGP704 LED140-4S/740 DM50 PGR SRT SRB 60	LED140	1 unit
910925868051	BGP704 LED210-4S/830 II DX10 PGR DDF3 D1	LED210	1 unit
910925868792	BGP704 LED100-4S/740 II DM32 MSP CLO-DDF	LED100	1 unit
910925870014	BGP704 LED140-1P/740 UEI DM11P SRTB GR	LED140	1 unit
910925866538	BGP703 LED120-4S/740 DM50 GF SRT SRB 60	LED120	1 unit
910925866539	BGP703 LED100-4S/830 II DW50 GF SRT SRB	LED100	1 unit
910925867788	BGP703 LED60-4S/740 II DM31 MSP CLO SRT	LED60	1 unit
910925867789	BGP703 LED120-4S/740 II DM11 CLO SRT SRB	LED120	1 unit
910925867790	BGP703 LED120-4S/740 II DM11 CLO SRT SRB	LED120	1 unit
910925867791	BGP703 LED120-4S/740 II DM32 MSP CLO SRT	LED120	1 unit
910925868046	BGP703 LED120-4S/740 DM50 PGR SRT SRB 60	LED120	1 unit
910925868047	BGP703 LED100-4S/830 II DW50 PGR SRT SRB	LED100	1 unit
910925870008	BGP703 LED120-1P/740 UE I DM11P SRTB GR	LED120	1 unit

Light Technical

Order Code	Full Product Name	Luminous Flux	Correlated Color Temperature (Nom)	Color rendering index (CRI)	Light source color	Luminaire light beam spread	Optic type outdoor
910925868406	BGP713 LED120-4S/740 DM50 GF SRT SRB 60	10,800 lm	4000 K	70	740 neutral white	42° x 85°	Distribution medium 50
910925868407	BGP713 LED100-4S/830 II DW50 GF SRT SRB	8,600 lm	3000 K	80	830 warm white	40° x 42°	Distribution wide 50
910925868409	BGP713 LED50-4S/740 II DM11 GF EZR SRB 6	4,550 lm	4000 K	70	740 neutral white	160° x 95°	Distribution medium 11

Order Code	Full Product Name	Luminous Flux	Correlated Color Temperature (Nom)	Color rendering index (CRI)	Light source color	Luminaire light beam spread	Optic type outdoor
910925870011	BGP713 LED120-1P/740 UE I DM11P PSU 42/6	11,040 lm	4000 K	70	740 neutral white	60° - 21° x 153°	Distribution medium 11
910925867324	BGP701 LED8-4S/740 DM11 FG GR 42/60P	728 lm	4000 K	70	740 neutral white	70° x 37°	Distribution medium 11
910925867325	BGP701 LED40-4S/740 DM10 GF SRT SRB 42/6	3,600 lm	4000 K	70	740 neutral white	73° x 44°	Distribution medium 10
910925868136	BGP701 LED60-4S/740 II DM11 CLO SRT SRB	5,220 lm	4000 K	70	740 neutral white	70° x 37°	Distribution medium 11
910925868225	BGP701 LED60-4S/740 II DM32 MSP CLO SRT	3,510 lm	4000 K	70	740 neutral white	65° x 39°	Distribution medium 32
910925868227	BGP701 LED40-4S/740 II DM10 MSP CLO SRT	3,510 lm	4000 K	70	740 neutral white	73° x 44°	Distribution medium 10
910925868799	BGP701 LED60-4S/730 DM11 DDF27 D18 SRG10	5,400 lm	3000 K	70	730 warm white	70° x 37°	Distribution medium 11
910925870002	BGP701 LED60-1P/740 UE DM11P SRTB GR 42/	5,520 lm	4000 K	70	740 neutral white	60° - 21° x 153°	Distribution medium 11
910925866534	BGP702 LED60-4S/740 DM11 GF SRT SRB 60/7	5,400 lm	4000 K	70	740 neutral white	70° x 37°	Distribution medium 11
910925866535	BGP702 LED40-4S/740 DM10 GF SRT SRB 60/7	3,600 lm	4000 K	70	740 neutral white	73° x 44°	Distribution medium 10
910925866536	BGP702 LW10 LED50-4S/830 DM11 GF CTGO	4,500 lm	3000 K	80	830 warm white	70° x 37°	Distribution medium 11
910925867784	BGP702 LED40-4S/740 II DM10 MSP CLO SRT	3,510 lm	4000 K	70	740 neutral white	73° x 44°	Distribution medium 10
910925867785	BGP702 LED60-4S/740 II DM32 MSP CLO SRT	5,278 lm	4000 K	70	740 neutral white	65° x 39°	Distribution medium 32
910925867786	BGP702 LED60-4S/740 II DM11 CLO SRT SRB	5,220 lm	4000 K	70	740 neutral white	70° x 37°	Distribution medium 11
910925867787	BGP702 LED60-4S/740 II DM11 CLO SRT SRB	5,220 lm	4000 K	70	740 neutral white	70° x 37°	Distribution medium 11
910925868042	BGP702 LED60-4S/740 DM11 PGR SRT SRB 60	5,400 lm	4000 K	70	740 neutral white	70° x 37°	Distribution medium 11
910925868043	BGP702 LED40-4S/740 DM10 PGR SRT SRB 60	3,600 lm	4000 K	70	740 neutral white	73° x 44°	Distribution medium 10
910925868044	BGP702 LW10 LED50-4S/830 DM11 PGR CTGO	4,500 lm	3000 K	80	830 warm white	70° x 37°	Distribution medium 11
910925868801	BGP702 LED60-4S/730 DM11 DDF27 D18 SRG10	5,400 lm	3000 K	70	730 warm white	70° x 37°	Distribution medium 11
910925870005	BGP702 LED60-1P/740 UE I DM11P SRTB GR 4	5,520 lm	4000 K	70	740 neutral white	60° - 21° x 153°	Distribution medium 11
910925867142	BGP705 LED150-4S/740 DM11 GF SRT SRB 60/	13,500 lm	4000 K	70	740 neutral white	70° x 37°	Distribution medium 11
910925867143	BGP705 LED300-4S/740 II DM11 GF SRT SRB	26,700 lm	4000 K	70	740 neutral white	70° x 37°	Distribution medium 11

Order Code	Full Product Name	Luminous Flux	Correlated Color Temperature (Nom)	Color rendering index (CRI)	Light source color	Luminaire light beam spread	Optic type outdoor
910925868226	BGP705 LED300-4S/740 II DM32 MSP CLO SRT	26,100 lm	4000 K	70	740 neutral white	65° x 39°	Distribution medium 32
910925868804	BGP705 LED580-4S/730 DM11 DDF27 D18 SRG1	48,140 lm	3000 K	70	730 warm white	70° x 37°	Distribution medium 11
910925870017	BGP705 LED500-1P/740 UE I DM11P SRTB GR	46,000 lm	4000 K	70	740 neutral white	60° - 21° x 153°	Distribution medium 11
910925866542	BGP704 LED140-4S/740 DM50 GF SRT SRB 60	12,740 lm	4000 K	70	740 neutral white	154° - 31° x 54°	Distribution medium 50
910925866543	BGP704 LED210-4S/830 II DX10 GF D18 DDF3	17,850 lm	3000 K	80	830 warm white	150° - 43° x 67°	Distribution extra wide 10
910925866544	BGP704 LW10 LED120-4S/830 DM11 GF CTGO	10,920 lm	3000 K	80	830 warm white	70° x 37°	Distribution medium 11
910925868050	BGP704 LED140-4S/740 DM50 PGR SRT SRB 60	12,740 lm	4000 K	70	740 neutral white	154° - 31° x 54°	Distribution medium 50
910925868051	BGP704 LED210-4S/830 II DX10 PGR DDF3 D1	17,850 lm	3000 K	80	830 warm white	150° - 43° x 67°	Distribution extra wide 10
910925868792	BGP704 LED100-4S/740 II DM32 MSP CLO-DDF	9,016 lm	4000 K	70	740 neutral white	65° x 39°	Distribution medium 32
910925870014	BGP704 LED140-1P/740 UEI DM11P SRTB GR	12,740 lm	4000 K	70	740 neutral white	60° - 21° x 153°	Distribution medium 11
910925866538	BGP703 LED120-4S/740 DM50 GF SRT SRB 60	10,800 lm	4000 K	70	740 neutral white	154° - 31° x 54°	Distribution medium 50
910925866539	BGP703 LED100-4S/830 II DW50 GF SRT SRB	8,600 lm	3000 K	80	830 warm white	150° - 43° x 67°	Distribution wide 50
910925867788	BGP703 LED60-4S/740 II DM31 MSP CLO SRT	5,278 lm	4000 K	70	740 neutral white	65° x 23°	Distribution medium 31
910925867789	BGP703 LED120-4S/740 II DM11 CLO SRT SRB	10,350 lm	4000 K	70	740 neutral white	70° x 37°	Distribution medium 11
910925867790	BGP703 LED120-4S/740 II DM11 CLO SRT SRB	10,350 lm	4000 K	70	740 neutral white	70° x 37°	Distribution medium 11
910925867791	BGP703 LED120-4S/740 II DM32 MSP CLO SRT	10,465 lm	4000 K	70	740 neutral white	65° x 39°	Distribution medium 32
910925868046	BGP703 LED120-4S/740 DM50 PGR SRT SRB 60	10,800 lm	4000 K	70	740 neutral white	154° - 31° x 54°	Distribution medium 50
910925868047	BGP703 LED100-4S/830 II DW50 PGR SRT SRB	8,600 lm	3000 K	80	830 warm white	150° - 43° x 67°	Distribution wide 50
910925870008	BGP703 LED120-1P/740 UE I DM11P SRTB GR	11,040 lm	4000 K	70	740 neutral white	60° - 21° x 153°	Distribution medium 11

Operating and Electrical

Order Code	Full Product Name	Power Consumption	Surge Protection (Common/Differential)
910925868406	BGP713 LED120-4S/740 DM50 GF SRT SRB 60	74 W	Surge protection level until 6 kV differential mode and 8 kV common mode

Order Code	Full Product Name	Power Consump-tion	Surge Protection (Common/Differential)
910925868407	BGP713 LED100-4S/830 II DW50 GF SRT SRB	79 W	Surge protection level until 6 kV differential mode and 8 kV common mode
910925868409	BGP713 LED50-4S/740 II DM11 GF EZR SRB 6	31.5 W	Surge protection level until 6 kV differential mode and 8 kV common mode
910925870011	BGP713 LED120-1P/740 UE I DM11P PSU 42/6	61 W	Surge protection level until 10 kV differential mode and 10 kV common mode
910925867324	BGP701 LED8-4S/740 DM11 FG GR 42/60P	6.1 W	Surge protection level until 6 kV differential mode and 8 kV common mode
910925867325	BGP701 LED40-4S/740 DM10 GF SRT SRB 42/6	25 W	Surge protection level until 6 kV differential mode and 8 kV common mode
910925868136	BGP701 LED60-4S/740 II DM11 CLO SRT SRB	37 W	Surge protection level until 6 kV differential mode and 8 kV common mode
910925868225	BGP701 LED60-4S/740 II DM32 MSP CLO SRT	38 W	Surge protection level until 10 kV differential mode
910925868227	BGP701 LED40-4S/740 II DM10 MSP CLO SRT	24 W	Surge protection level until 10 kV differential mode
910925868799	BGP701 LED60-4S/730 DM11 DDF27 D18 SRG10	42 W	Surge protection level until 10 kV differential mode and 10 kV common mode
910925870002	BGP701 LED60-1P/740 UE DM11P SRTB GR 42/	31 W	Surge protection level until 6 kV differential mode and 8 kV common mode
910925866534	BGP702 LED60-4S/740 DM11 GF SRT SRB 60/7	38 W	Surge protection level until 6 kV differential mode and 8 kV common mode
910925866535	BGP702 LED40-4S/740 DM10 GF SRT SRB 60/7	25 W	Surge protection level until 6 kV differential mode and 8 kV common mode
910925866536	BGP702 LW10 LED50-4S/830 DM11 GF CTGO	40.5 W	Surge protection level until 6 kV differential mode and 8 kV common mode
910925867784	BGP702 LED40-4S/740 II DM10 MSP CLO SRT	24 W	Surge protection level until 10 kV differential mode
910925867785	BGP702 LED60-4S/740 II DM32 MSP CLO SRT	37 W	Surge protection level until 10 kV differential mode
910925867786	BGP702 LED60-4S/740 II DM11 CLO SRT SRB	37 W	Surge protection level until 6 kV differential mode and 8 kV common mode
910925867787	BGP702 LED60-4S/740 II DM11 CLO SRT SRB	37 W	Surge protection level until 6 kV differential mode and 8 kV common mode
910925868042	BGP702 LED60-4S/740 DM11 PGR SRT SRB 60	38 W	Surge protection level until 6 kV differential mode and 8 kV common mode
910925868043	BGP702 LED40-4S/740 DM10 PGR SRT SRB 60	25 W	Surge protection level until 6 kV differential mode and 8 kV common mode
910925868044	BGP702 LW10 LED50-4S/830 DM11 PGR CTGO	40.5 W	Surge protection level until 6 kV differential mode and 8 kV common mode
910925868801	BGP702 LED60-4S/730 DM11 DDF27 D18 SRG10	40.5 W	Surge protection level until 10 kV differential mode and 10 kV common mode
910925870005	BGP702 LED60-1P/740 UE I DM11P SRTB GR 4	31 W	Surge protection level until 6 kV differential mode and 8 kV common mode
910925867142	BGP705 LED150-4S/740 DM11 GF SRT SRB 60/	87 W	Surge protection level until 6 kV differential mode and 8 kV common mode
910925867143	BGP705 LED300-4S/740 II DM11 GF SRT SRB	174 W	Surge protection level until 6 kV differential mode and 8 kV common mode

Order Code	Full Product Name	Power Consump-tion	Surge Protection (Common/Differential)
910925868226	BGP705 LED300-4S/740 II DM32 MSP CLO SRT	170 W	Surge protection level until 10 kV differential mode
910925868804	BGP705 LED580-4S/730 DM11 DDF27 D18 SRG1	375 W	Surge protection level until 10 kV differential mode and 10 kV common mode
910925870017	BGP705 LED500-1P/740 UE I DM11P SRTB GR	250 W	Surge protection level until 6 kV differential mode and 8 kV common mode
910925866542	BGP704 LED140-4S/740 DM50 GF SRT SRB 60	83 W	Surge protection level until 6 kV differential mode and 8 kV common mode
910925866543	BGP704 LED210-4S/830 II DX10 GF D18 DDF3	166 W	Surge protection level until 6 kV differential mode and 8 kV common mode
910925866544	BGP704 LW10 LED120-4S/830 DM11 GF CTGO	91 W	Surge protection level until 6 kV differential mode and 8 kV common mode
910925868050	BGP704 LED140-4S/740 DM50 PGR SRT SRB 60	83 W	Surge protection level until 6 kV differential mode and 8 kV common mode
910925868051	BGP704 LED210-4S/830 II DX10 PGR DDF3 D1	166 W	Surge protection level until 6 kV differential mode and 8 kV common mode
910925868792	BGP704 LED100-4S/740 II DM32 MSP CLO-DDF	57 W	Surge protection level until 6 kV differential mode and 8 kV common mode
910925870014	BGP704 LED140-1P/740 UEI DM11P SRTB GR	68 W	Surge protection level until 6 kV differential mode and 8 kV common mode
910925866538	BGP703 LED120-4S/740 DM50 GF SRT SRB 60	74 W	Surge protection level until 6 kV differential mode and 8 kV common mode
910925866539	BGP703 LED100-4S/830 II DW50 GF SRT SRB	79 W	Surge protection level until 6 kV differential mode and 8 kV common mode
910925867788	BGP703 LED60-4S/740 II DM31 MSP CLO SRT	37 W	Surge protection level until 10 kV differential mode
910925867789	BGP703 LED120-4S/740 II DM11 CLO SRT SRB	71 W	Surge protection level until 6 kV differential mode and 8 kV common mode
910925867790	BGP703 LED120-4S/740 II DM11 CLO SRT SRB	71 W	Surge protection level until 6 kV differential mode and 8 kV common mode
910925867791	BGP703 LED120-4S/740 II DM32 MSP CLO SRT	71 W	Surge protection level until 10 kV differential mode
910925868046	BGP703 LED120-4S/740 DM50 PGR SRT SRB 60	74 W	Surge protection level until 6 kV differential mode and 8 kV common mode
910925868047	BGP703 LED100-4S/830 II DW50 PGR SRT SRB	79 W	Surge protection level until 6 kV differential mode and 8 kV common mode
910925870008	BGP703 LED120-1P/740 UE I DM11P SRTB GR	61 W	Surge protection level until 6 kV differential mode and 8 kV common mode

Controls and Dimming

Order Code	Full Product Name	Dimmable	Maximum dim level
910925868406	BGP713 LED120-4S/740 DM50 GF SRT SRB 60	No	Not applicable
910925868407	BGP713 LED100-4S/830 II DW50 GF SRT SRB	No	Not applicable
910925868409	BGP713 LED50-4S/740 II DM11 GF EZR SRB 6	Yes	1%
910925870011	BGP713 LED120-1P/740 UE I DM11P PSU 42/6	No	Not applicable
910925867324	BGP701 LED8-4S/740 DM11 FG GR 42/60P	No	Not applicable

Order Code	Full Product Name	Dimmable	Maximum dim level
910925867325	BGP701 LED40-4S/740 DM10 GF SRT SRB 42/6	No	Not applicable
910925868136	BGP701 LED60-4S/740 II DM11 CLO SRT SRB	No	Not applicable
910925868225	BGP701 LED60-4S/740 II DM32 MSP CLO SRT	No	Not applicable
910925868227	BGP701 LED40-4S/740 II DM10 MSP CLO SRT	No	Not applicable
910925868799	BGP701 LED60-4S/730 DM11 DDF27 D18 SRG10	Yes	50%
910925870002	BGP701 LED60-1P/740 UE DM11P SRTB GR 42/	No	Not applicable
910925866534	BGP702 LED60-4S/740 DM11 GF SRT SRB 60/7	No	Not applicable
910925866535	BGP702 LED40-4S/740 DM10 GF SRT SRB 60/7	No	Not applicable
910925866536	BGP702 LW10 LED50-4S/830 DM11 GF CTGO	No	Not applicable
910925867784	BGP702 LED40-4S/740 II DM10 MSP CLO SRT	No	Not applicable
910925867785	BGP702 LED60-4S/740 II DM32 MSP CLO SRT	No	Not applicable
910925867786	BGP702 LED60-4S/740 II DM11 CLO SRT SRB	No	Not applicable
910925867787	BGP702 LED60-4S/740 II DM11 CLO SRT SRB	No	Not applicable
910925868042	BGP702 LED60-4S/740 DM11 PGR SRT SRB 60	No	Not applicable
910925868043	BGP702 LED40-4S/740 DM10 PGR SRT SRB 60	No	Not applicable
910925868044	BGP702 LW10 LED50-4S/830 DM11 PGR CTGO	Yes	Not applicable
910925868801	BGP702 LED60-4S/730 DM11 DDF27 D18 SRG10	Yes	50%
910925870005	BGP702 LED60-1P/740 UE I DM11P SRTB GR 4	No	Not applicable
910925867142	BGP705 LED150-4S/740 DM11 GF SRT SRB 60/	No	Not applicable
910925867143	BGP705 LED300-4S/740 II DM11 GF SRT SRB	No	Not applicable
910925868226	BGP705 LED300-4S/740 II DM32 MSP CLO SRT	No	Not applicable
910925868804	BGP705 LED580-4S/730 DM11 DDF27 D18 SRG1	Yes	50%
910925870017	BGP705 LED500-1P/740 UE I DM11P SRTB GR	No	Not applicable
910925866542	BGP704 LED140-4S/740 DM50 GF SRT SRB 60	No	Not applicable
910925866543	BGP704 LED210-4S/830 II DX10 GF D18 DDF3	Yes	30%
910925866544	BGP704 LW10 LED120-4S/830 DM11 GF CTGO	No	Not applicable
910925868050	BGP704 LED140-4S/740 DM50 PGR SRT SRB 60	No	Not applicable
910925868051	BGP704 LED210-4S/830 II DX10 PGR DDF3 D1	Yes	30%
910925868792	BGP704 LED100-4S/740 II DM32 MSP CLO-DDF	Yes	50%
910925870014	BGP704 LED140-1P/740 UEI DM11P SRTB GR	No	Not applicable
910925866538	BGP703 LED120-4S/740 DM50 GF SRT SRB 60	No	Not applicable
910925866539	BGP703 LED100-4S/830 II DW50 GF SRT SRB	No	Not applicable
910925867788	BGP703 LED60-4S/740 II DM31 MSP CLO SRT	No	Not applicable
910925867789	BGP703 LED120-4S/740 II DM11 CLO SRT SRB	No	Not applicable
910925867790	BGP703 LED120-4S/740 II DM11 CLO SRT SRB	No	Not applicable
910925867791	BGP703 LED120-4S/740 II DM32 MSP CLO SRT	No	Not applicable
910925868046	BGP703 LED120-4S/740 DM50 PGR SRT SRB 60	No	Not applicable
910925868047	BGP703 LED100-4S/830 II DW50 PGR SRT SRB	No	Not applicable
910925870008	BGP703 LED120-1P/740 UE I DM11P SRTB GR	No	Not applicable

Mechanical and Housing

Order Code	Full Product Name	Housing Color	Mech. impact protection code	Standard tilt angle posttop	Standard tilt angle side entry
910925868406	BGP713 LED120-4S/740 DM50 GF SRT SRB 60	Gray	IK09	0°	0°
910925868407	BGP713 LED100-4S/830 II DW50 GF SRT SRB	Gray	IK09	0°	0°
910925868409	BGP713 LED50-4S/740 II DM11 GF EZR SRB 6	Dark gray	IK09	0°	0°
910925870011	BGP713 LED120-1P/740 UE I DM11P PSU 42/6	Gray	IK09	0°	0°
910925867324	BGP701 LED8-4S/740 DM11 FG GR 42/60P	Gray	IK10	0°	-
910925867325	BGP701 LED40-4S/740 DM10 GF SRT SRB 42/6	Gray	IK09	0°	-
910925868136	BGP701 LED60-4S/740 II DM11 CLO SRT SRB	Gray	IK09	-	0°
910925868225	BGP701 LED60-4S/740 II DM32 MSP CLO SRT	Gray	IK09	0°	0°
910925868227	BGP701 LED40-4S/740 II DM10 MSP CLO SRT	Gray	IK09	0°	0°
910925868799	BGP701 LED60-4S/730 DM11 DDF27 D18 SRG10	Gray	IK10	-	0°
910925870002	BGP701 LED60-1P/740 UE DM11P SRTB GR 42/	Gray	IK09	0°	0°
910925866534	BGP702 LED60-4S/740 DM11 GF SRT SRB 60/7	Gray	IK09	0°	-
910925866535	BGP702 LED40-4S/740 DM10 GF SRT SRB 60/7	Gray	IK09	0°	-
910925866536	BGP702 LW10 LED50-4S/830 DM11 GF CTGO	Gray	IK09	0°	-
910925867784	BGP702 LED40-4S/740 II DM10 MSP CLO SRT	Gray	IK09	0°	-
910925867785	BGP702 LED60-4S/740 II DM32 MSP CLO SRT	Gray	IK09	0°	-
910925867786	BGP702 LED60-4S/740 II DM11 CLO SRT SRB	Gray	IK09	-	0°
910925867787	BGP702 LED60-4S/740 II DM11 CLO SRT SRB	Gray	IK09	-	0°
910925868042	BGP702 LED60-4S/740 DM11 PGR SRT SRB 60	Gray	IK09	0°	-
910925868043	BGP702 LED40-4S/740 DM10 PGR SRT SRB 60	Gray	IK09	0°	-
910925868044	BGP702 LW10 LED50-4S/830 DM11 PGR CTGO	Gray	IK09	0°	-
910925868801	BGP702 LED60-4S/730 DM11 DDF27 D18 SRG10	Gray	IK10	-	0°
910925870005	BGP702 LED60-1P/740 UE I DM11P SRTB GR 4	Gray	IK09	0°	0°
910925867142	BGP705 LED150-4S/740 DM11 GF SRT SRB 60/	Gray	IK09	0°	-
910925867143	BGP705 LED300-4S/740 II DM11 GF SRT SRB	Gray	IK09	0°	-
910925868226	BGP705 LED300-4S/740 II DM32 MSP CLO SRT	Gray	IK09	0°	0°
910925868804	BGP705 LED580-4S/730 DM11 DDF27 D18 SRG1	Grey	IK10	-	0°
910925870017	BGP705 LED500-1P/740 UE I DM11P SRTB GR	Gray	IK09	0°	0°
910925866542	BGP704 LED140-4S/740 DM50 GF SRT SRB 60	Gray	IK09	0°	-
910925866543	BGP704 LED210-4S/830 II DX10 GF D18 DDF3	Gray	IK10	0°	-
910925866544	BGP704 LW10 LED120-4S/830 DM11 GF CTGO	Gray	IK09	0°	-
910925868050	BGP704 LED140-4S/740 DM50 PGR SRT SRB 60	Gray	IK09	0°	-
910925868051	BGP704 LED210-4S/830 II DX10 PGR DDF3 D1	Gray	IK10	0°	-
910925868792	BGP704 LED100-4S/740 II DM32 MSP CLO-DDF	Gray	IK09	0°	-
910925870014	BGP704 LED140-1P/740 UEI DM11P SRTB GR	Gray	IK09	0°	0°
910925866538	BGP703 LED120-4S/740 DM50 GF SRT SRB 60	Gray	IK09	0°	-
910925866539	BGP703 LED100-4S/830 II DW50 GF SRT SRB	Gray	IK09	0°	-

Order Code	Full Product Name	Housing Color	Mech. impact protection code	Standard tilt angle posttop	Standard tilt angle side entry
910925867788	BGP703 LED60-4S/740 II DM31 MSP CLO SRT	Gray	IK09	0°	-
910925867789	BGP703 LED120-4S/740 II DM11 CLO SRT SRB	Gray	IK09	0°	-
910925867790	BGP703 LED120-4S/740 II DM11 CLO SRT SRB	Gray	IK09	-	0°
910925867791	BGP703 LED120-4S/740 II DM32 MSP CLO SRT	Gray	IK09	0°	-
910925868046	BGP703 LED120-4S/740 DM50 PGR SRT SRB 60	Gray	IK09	0°	-
910925868047	BGP703 LED100-4S/830 II DW50 PGR SRT SRB	Gray	IK09	0°	-
910925870008	BGP703 LED120-1P/740 UE I DM11P SRTB GR	Gray	IK09	0°	0°

Approval and Application

Order Code	Full Product Name	Flammability mark
910925868406	BGP713 LED120-4S/740 DM50 GF SRT SRB 60	For mounting on normally flammable surfaces
910925868407	BGP713 LED100-4S/830 II DW50 GF SRT SRB	For mounting on normally flammable surfaces
910925868409	BGP713 LED50-4S/740 II DM11 GF EZR SRB 6	For mounting on normally flammable surfaces
910925870011	BGP713 LED120-1P/740 UE I DM11P PSU 42/6	-
910925867324	BGP701 LED8-4S/740 DM11 FG GR 42/60P	-
910925867325	BGP701 LED40-4S/740 DM10 GF SRT SRB 42/6	-
910925868136	BGP701 LED60-4S/740 II DM11 CLO SRT SRB	-
910925868225	BGP701 LED60-4S/740 II DM32 MSP CLO SRT	-
910925868227	BGP701 LED40-4S/740 II DM10 MSP CLO SRT	-
910925868799	BGP701 LED60-4S/730 DM11 DDF27 D18 SRG10	-
910925870002	BGP701 LED60-1P/740 UE DM11P SRTB GR 42/	-
910925866534	BGP702 LED60-4S/740 DM11 GF SRT SRB 60/7	-
910925866535	BGP702 LED40-4S/740 DM10 GF SRT SRB 60/7	-
910925866536	BGP702 LW10 LED50-4S/830 DM11 GF CTGO	-
910925867784	BGP702 LED40-4S/740 II DM10 MSP CLO SRT	-
910925867785	BGP702 LED60-4S/740 II DM32 MSP CLO SRT	-
910925867786	BGP702 LED60-4S/740 II DM11 CLO SRT SRB	-
910925867787	BGP702 LED60-4S/740 II DM11 CLO SRT SRB	-
910925868042	BGP702 LED60-4S/740 DM11 PGR SRT SRB 60	-
910925868043	BGP702 LED40-4S/740 DM10 PGR SRT SRB 60	-
910925868044	BGP702 LW10 LED50-4S/830 DM11 PGR CTGO	-
910925868801	BGP702 LED60-4S/730 DM11 DDF27 D18 SRG10	-
910925870005	BGP702 LED60-1P/740 UE I DM11P SRTB GR 4	-
910925867142	BGP705 LED150-4S/740 DM11 GF SRT SRB 60/	-
910925867143	BGP705 LED300-4S/740 II DM11 GF SRT SRB	-
910925868226	BGP705 LED300-4S/740 II DM32 MSP CLO SRT	-
910925868804	BGP705 LED580-4S/730 DM11 DDF27 D18 SRG1	-

Order Code	Full Product Name	Flammability mark
910925870017	BGP705 LED500-1P/740 UE I DM11P SRTB GR	-
910925866542	BGP704 LED140-4S/740 DM50 GF SRT SRB 60	-
910925866543	BGP704 LED210-4S/830 II DX10 GF D18 DDF3	-
910925866544	BGP704 LW10 LED120-4S/830 DM11 GF CTGO	-
910925868050	BGP704 LED140-4S/740 DM50 PGR SRT SRB 60	-
910925868051	BGP704 LED210-4S/830 II DX10 PGR DDF3 D1	-
910925868792	BGP704 LED100-4S/740 II DM32 MSP CLO-DDF	-
910925870014	BGP704 LED140-1P/740 UEI DM11P SRTB GR	-
910925866538	BGP703 LED120-4S/740 DM50 GF SRT SRB 60	-
910925866539	BGP703 LED100-4S/830 II DW50 GF SRT SRB	-
910925867788	BGP703 LED60-4S/740 II DM31 MSP CLO SRT	-
910925867789	BGP703 LED120-4S/740 II DM11 CLO SRT SRB	-
910925867790	BGP703 LED120-4S/740 II DM11 CLO SRT SRB	-
910925867791	BGP703 LED120-4S/740 II DM32 MSP CLO SRT	-
910925868046	BGP703 LED120-4S/740 DM50 PGR SRT SRB 60	-
910925868047	BGP703 LED100-4S/830 II DW50 PGR SRT SRB	-
910925870008	BGP703 LED120-1P/740 UE I DM11P SRTB GR	-

Product Data

Order Code	Full Product Name	Product family code
910925868406	BGP713 LED120-4S/740 DM50 GF SRT SRB 60	BGP713
910925868407	BGP713 LED100-4S/830 II DW50 GF SRT SRB	BGP713
910925868409	BGP713 LED50-4S/740 II DM11 GF EZR SRB 6	BGP713
910925870011	BGP713 LED120-1P/740 UE I DM11P PSU 42/6	BGP713
910925867324	BGP701 LED8-4S/740 DM11 FG GR 42/60P	BGP701
910925867325	BGP701 LED40-4S/740 DM10 GF SRT SRB 42/6	BGP701
910925868136	BGP701 LED60-4S/740 II DM11 CLO SRT SRB	BGP701
910925868225	BGP701 LED60-4S/740 II DM32 MSP CLO SRT	BGP701
910925868227	BGP701 LED40-4S/740 II DM10 MSP CLO SRT	BGP701
910925868799	BGP701 LED60-4S/730 DM11 DDF27 D18 SRG10	BGP701
910925870002	BGP701 LED60-1P/740 UE DM11P SRTB GR 42/	BGP701
910925866534	BGP702 LED60-4S/740 DM11 GF SRT SRB 60/7	BGP702
910925866535	BGP702 LED40-4S/740 DM10 GF SRT SRB 60/7	BGP702
910925866536	BGP702 LW10 LED50-4S/830 DM11 GF CTGO	BGP702
910925867784	BGP702 LED40-4S/740 II DM10 MSP CLO SRT	BGP702
910925867785	BGP702 LED60-4S/740 II DM32 MSP CLO SRT	BGP702
910925867786	BGP702 LED60-4S/740 II DM11 CLO SRT SRB	BGP702
910925867787	BGP702 LED60-4S/740 II DM11 CLO SRT SRB	BGP702
910925868042	BGP702 LED60-4S/740 DM11 PGR SRT SRB 60	BGP702

Order Code	Full Product Name	Product family code
910925868043	BGP702 LED40-4S/740 DM10 PGR SRT SRB 60	BGP702
910925868044	BGP702 LW10 LED50-4S/830 DM11 PGR CTGO	BGP702
910925868801	BGP702 LED60-4S/730 DM11 DDF27 D18 SRG10	BGP702
910925870005	BGP702 LED60-1P/740 UE I DM11P SRTB GR 4	BGP702
910925867142	BGP705 LED150-4S/740 DM11 GF SRT SRB 60/	BGP705
910925867143	BGP705 LED300-4S/740 II DM11 GF SRT SRB	BGP705
910925868226	BGP705 LED300-4S/740 II DM32 MSP CLO SRT	BGP705
910925868804	BGP705 LED580-4S/730 DM11 DDF27 D18 SRG1	BGP705
910925870017	BGP705 LED500-1P/740 UE I DM11P SRTB GR	BGP705
910925866542	BGP704 LED140-4S/740 DM50 GF SRT SRB 60	BGP704
910925866543	BGP704 LED210-4S/830 II DX10 GF D18 DDF3	BGP704
910925866544	BGP704 LW10 LED120-4S/830 DM11 GF CTGO	BGP704
910925868050	BGP704 LED140-4S/740 DM50 PGR SRT SRB 60	BGP704
910925868051	BGP704 LED210-4S/830 II DX10 PGR DDF3 D1	BGP704
910925868792	BGP704 LED100-4S/740 II DM32 MSP CLO-DDF	BGP704
910925870014	BGP704 LED140-1P/740 UEI DM11P SRTB GR	BGP704
910925866538	BGP703 LED120-4S/740 DM50 GF SRT SRB 60	BGP703
910925866539	BGP703 LED100-4S/830 II DW50 GF SRT SRB	BGP703
910925867788	BGP703 LED60-4S/740 II DM31 MSP CLO SRT	BGP703
910925867789	BGP703 LED120-4S/740 II DM11 CLO SRT SRB	BGP703
910925867790	BGP703 LED120-4S/740 II DM11 CLO SRT SRB	BGP703
910925867791	BGP703 LED120-4S/740 II DM32 MSP CLO SRT	BGP703
910925868046	BGP703 LED120-4S/740 DM50 PGR SRT SRB 60	BGP703
910925868047	BGP703 LED100-4S/830 II DW50 PGR SRT SRB	BGP703
910925870008	BGP703 LED120-1P/740 UE I DM11P SRTB GR	BGP703

Polar normal diagrams

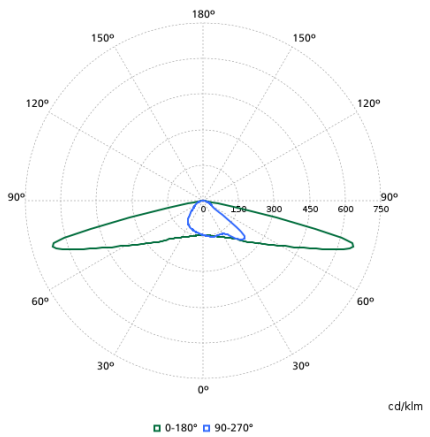

BGP713I - 910925868406

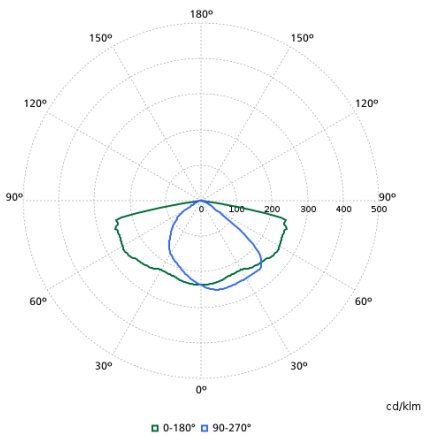

BGP713I - 910925868409

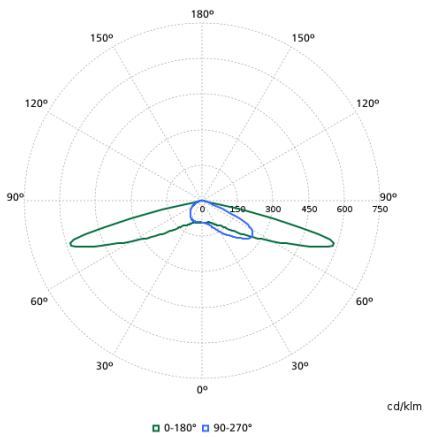

BGP713I - 910925868407

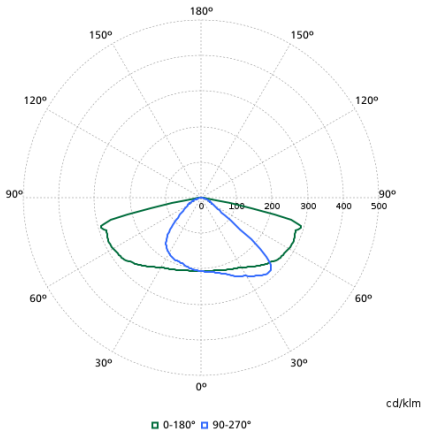

BGP702I - 910925868801

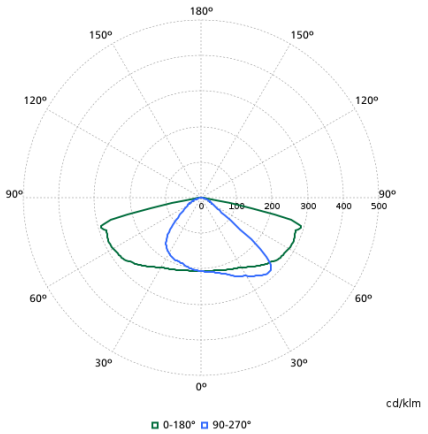

BGP702I - 910925866536

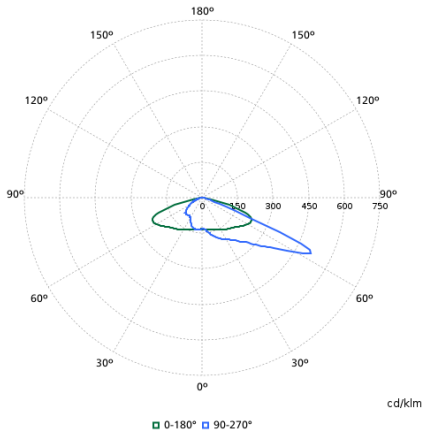

BGP704I - 910925866543

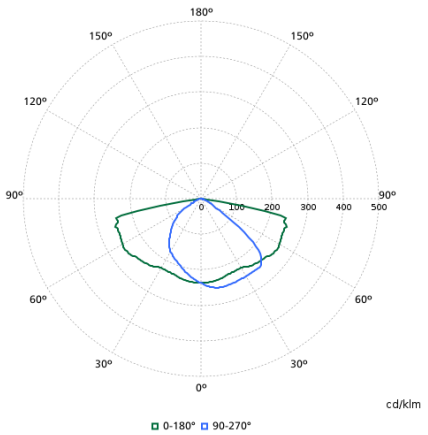

BGP704I - 910925866544

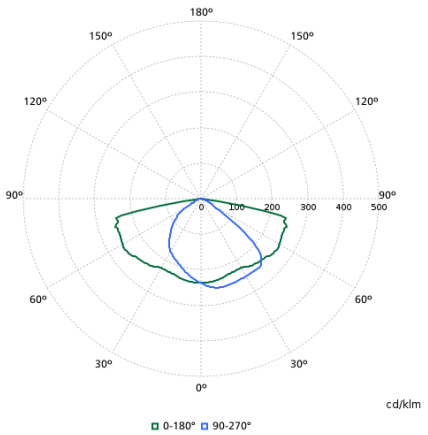

BGP705I - 910925867142

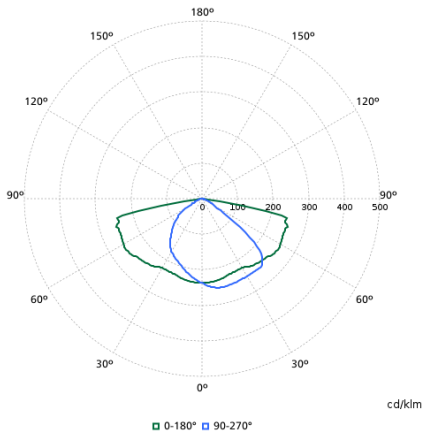

BGP705I - 910925867143

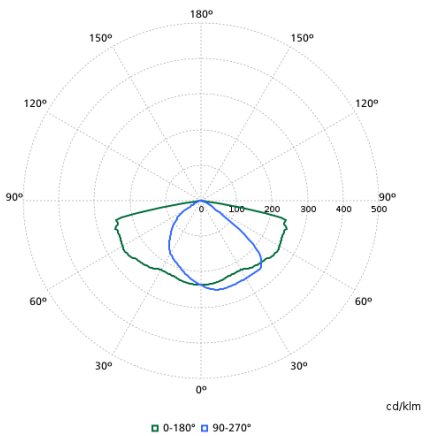

BGP701I - 910925867324

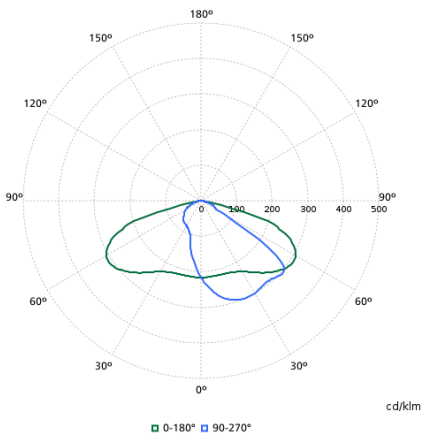

BGP704I - 910925868792

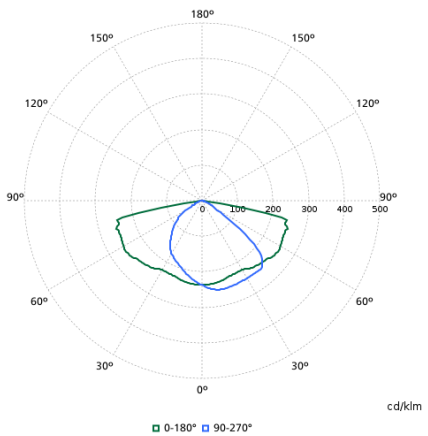

BGP701I - 910925868799

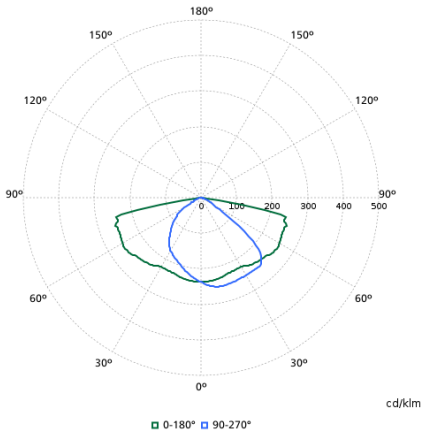

BGP705I - 910925868804

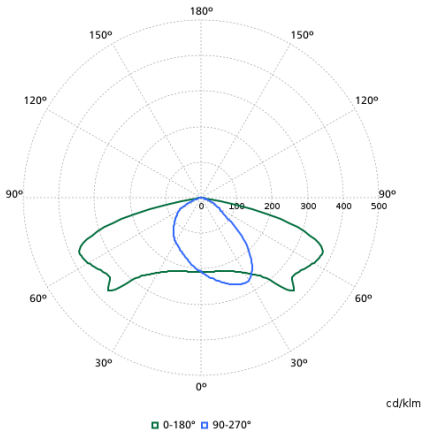

BGP702 LED60-1P/740 UE I DM11P SRTB GR 4 910925870005

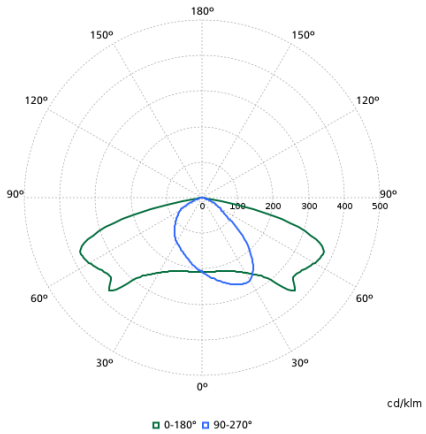

BGP703 LED120-1P/740 UE I DM11P SRTB GR 910925870008

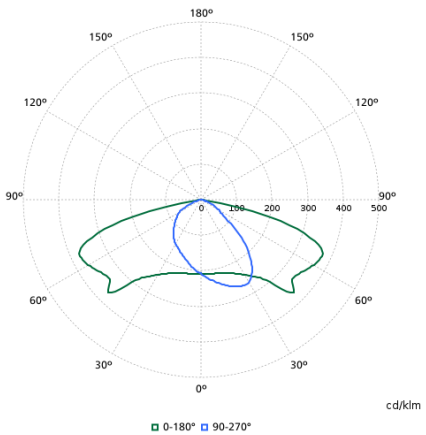

BGP705 LED500-1P/740 UE I DM11P SRTB GR 910925870017

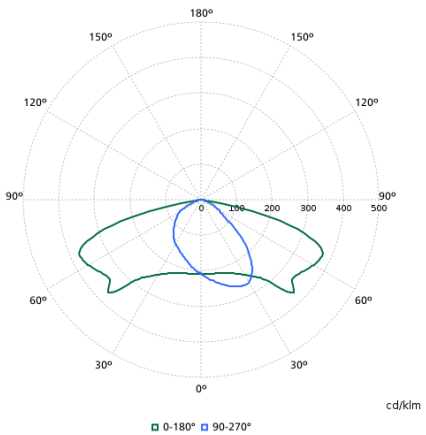

BGP713 LED120-1P/740 UE I DM11P PSU 42/6 910925870011

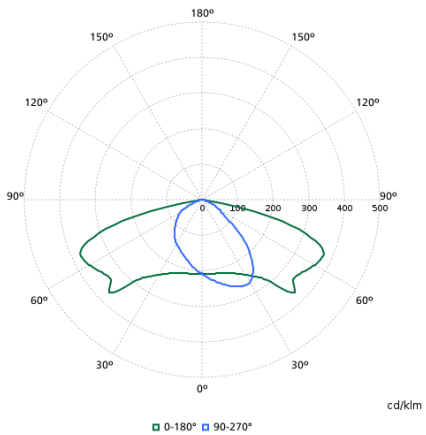

BGP701 LED60-1P/740 UE DM11P SRTB GR 42/ 910925870002

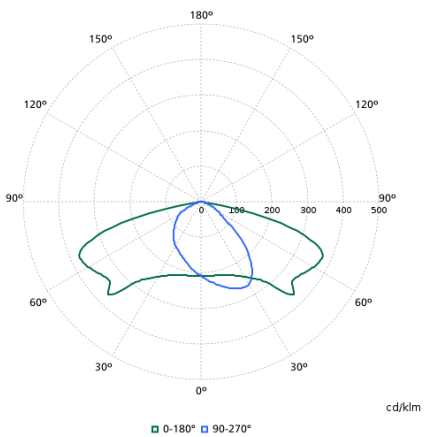

BGP704 LED140-1P/740 UEI DM11P SRTB GR 910925870014

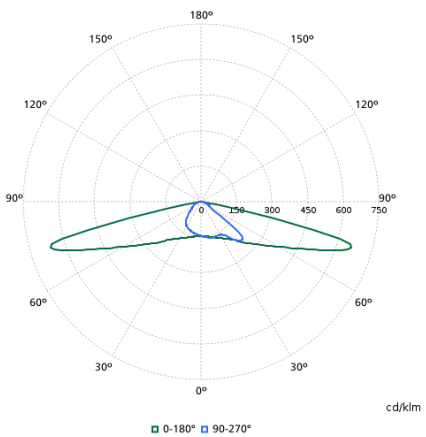

BGP704 LED140-4S/740 DM50 GF SRT SRB 60 910925866542

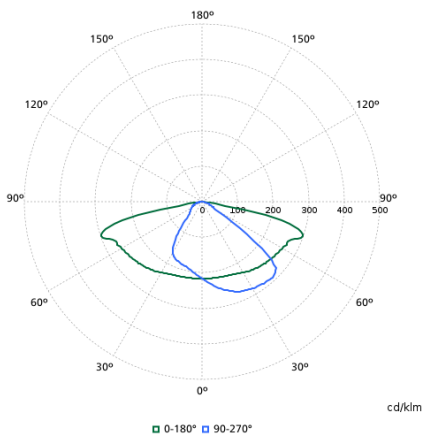

BGP702 LED40-4S/740 DM10 GF SRT SRB 60/7 910925866535

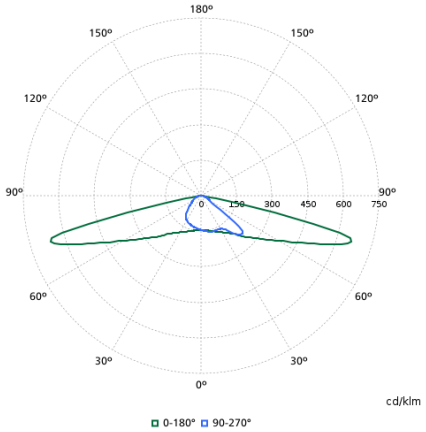

BGP703 LED120-4S/740 DM50 GF SRT SRB 60 910925866538

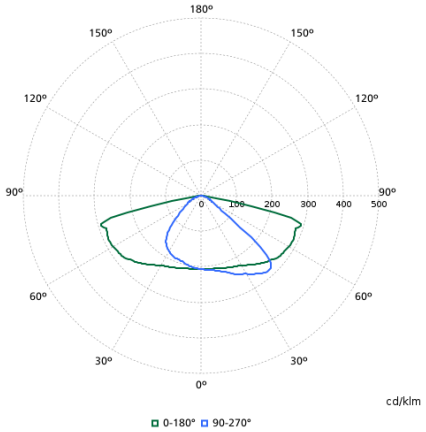

BGP702 LED60-4S/740 DM11 GF SRT SRB 60/7 910925866534

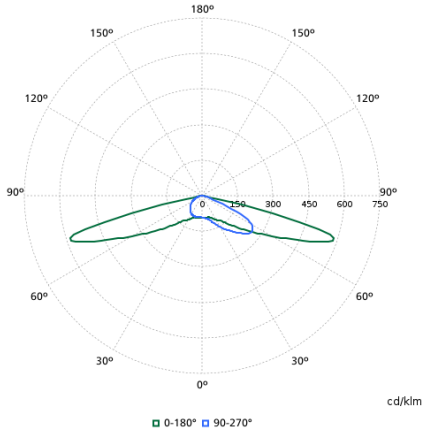

BGP703 LED100-4S/830 II DW50 GF SRT SRB 910925866539

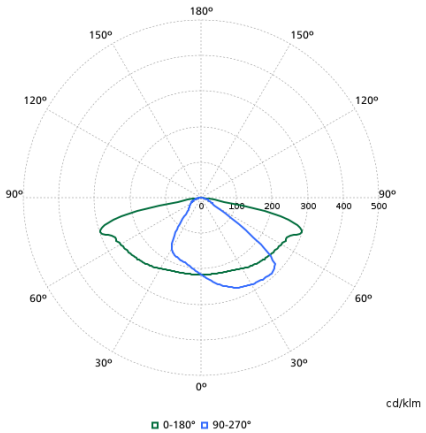

BGP701 LED40-4S/740 DM10 GF SRT SRB 42/6 910925867325

© 2026 Signify Holding. All rights reserved. The information provided herein is subject to change, without notice. Signify does not give any representation or warranty as to the accuracy or completeness of the information included herein and shall not be liable for any action in reliance thereon. The information presented in this document is not intended as any commercial offer and does not form part of any quotation or contract, unless otherwise agreed by Signify. All trademarks are owned by Signify Holding or their respective owners.