PHILIPS

GreenPerform Highbay G5

BY698PG5



GreenPerform Highbay G5: a versatile LED highbay with optimized performance and future-proof control system

The GreenPerform Highbay G5 continues the GreenPerform family's enviable reputation for reliable performance. Not only does it deliver leading system efficacy and extended long-term quality, it also promises Unified Glare Rating (UGR) control with compact dimensions. GreenPerform Highbay G5 is also fully compatible with IoT software such as Interact, which is a scalable, future-proof control system. The family also has a series that supports cold room applications with 100% humidity and no condensation. All benefits than make this robust, optimized, and versatile family suitable for almost all industrial applications.

Benefits

- Excellent energy savings
- Long-term quality and reliability
- Visual comfort
- Wide range of applications
- Connected ready for cloud-based IoT software applications

Applications

- Manufacturing
- Warehouses
- Logistic center
- Exhibition hall

Features

- 170 lm/W system efficacy
- 75,000 hours L70B50 lifetime @Ta 35^{0}
- Glare control (Narrow Beam), uniform illuminance (Wide Beam
- Works seamlessly with the Interact IoT software and platform
- Cold room application support

Versions



BY698X



GreenPerform Highbay G5



GreenPerform Highbay G5



BY698X

Dimensional drawing

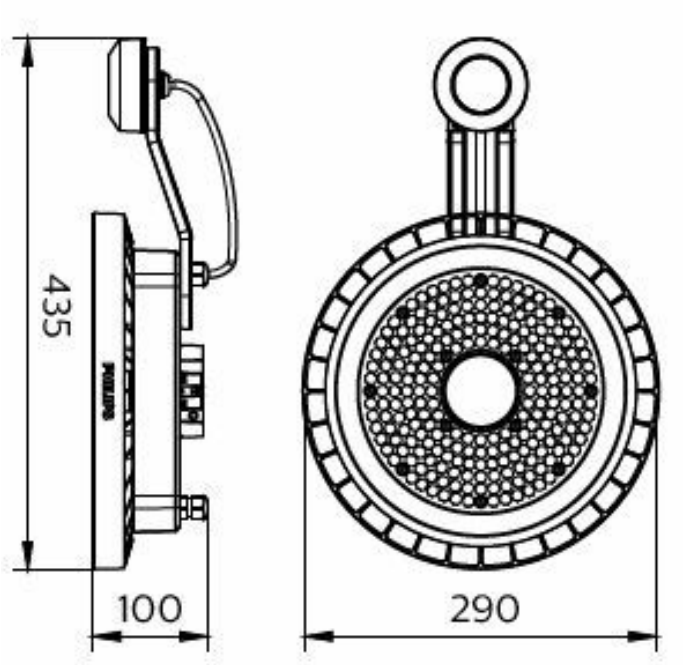

BY698X G5 LED105/CW L1W MW WB GM L3m

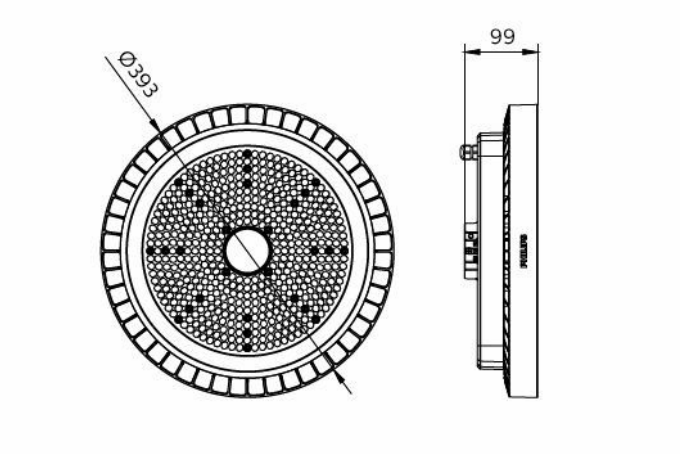

BY690P LED300/CW PSU WB GM

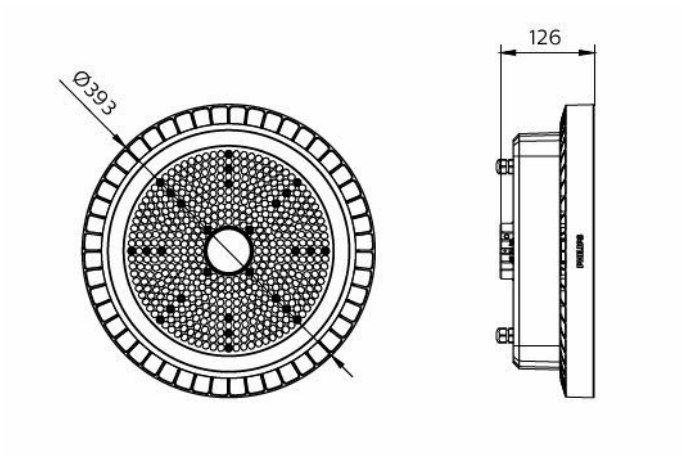

BY698P G5 LED250/CW PSD WB GM

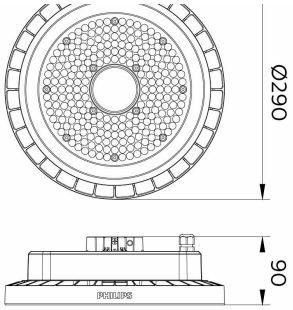

BY698P G5 LED105/NW PSU NB GM L3m

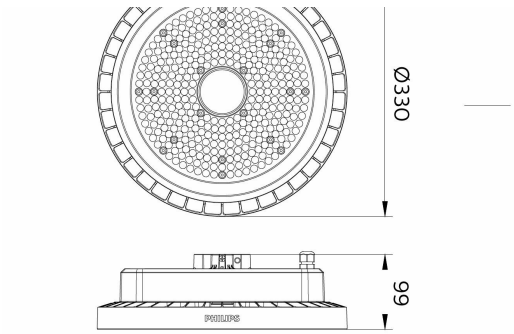

BY690P LED200/NW PSU WB GM

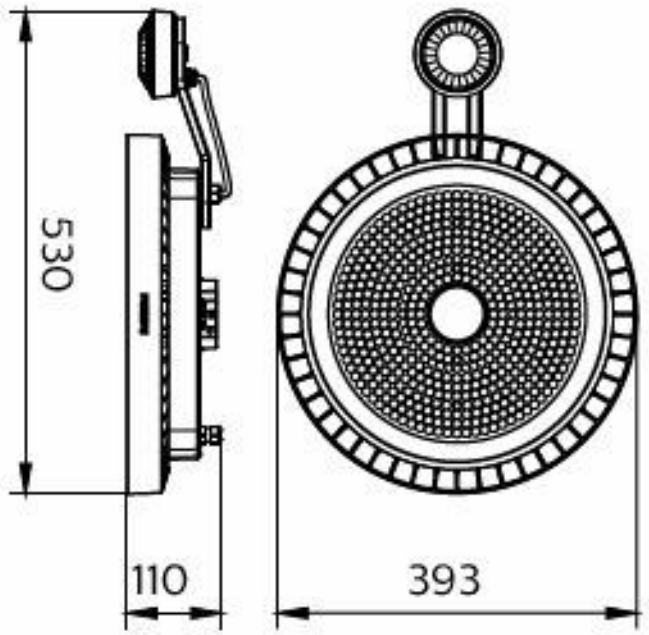

BY698X G5 LED300/NW L1W PIR WB GC

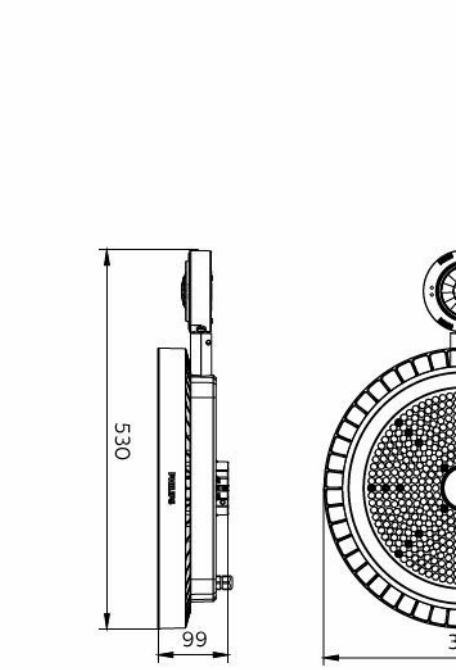

BY698X G5 LED200/840 Connected WB CAU

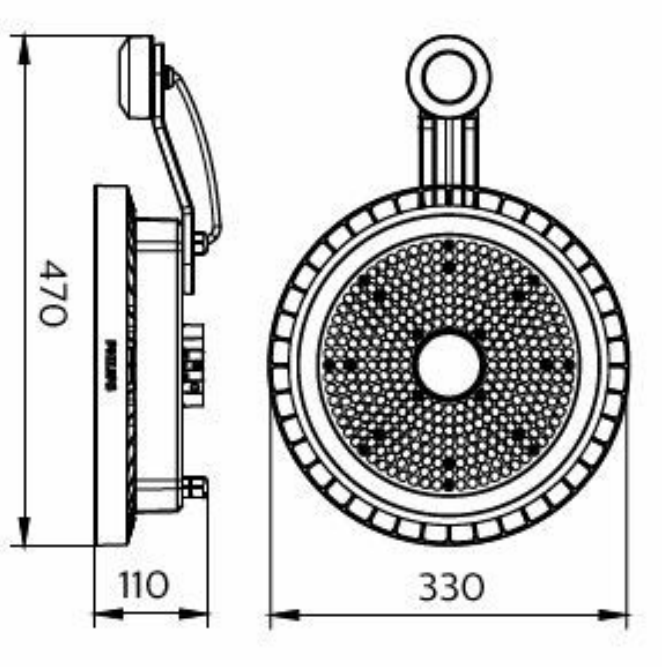

BY698X G5 LED200/CW L1W MW WB GM

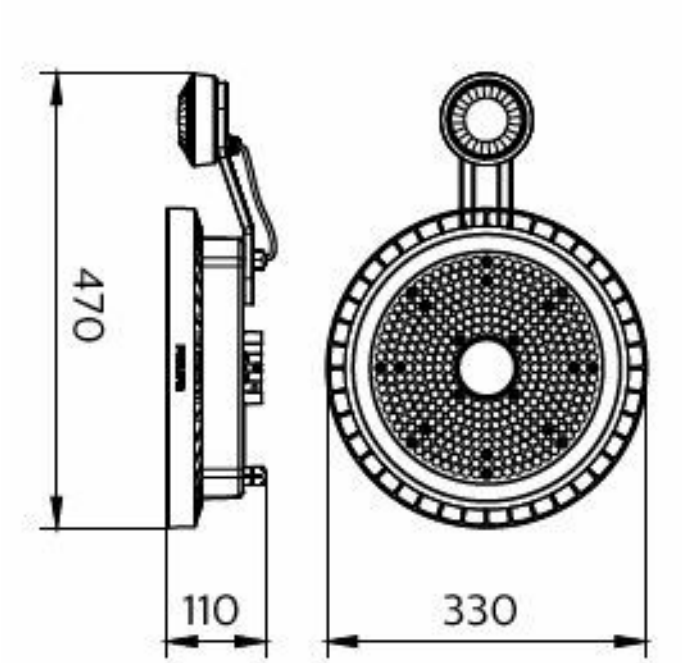

BY698X G5 LED200/NW L1W PIR WB GC

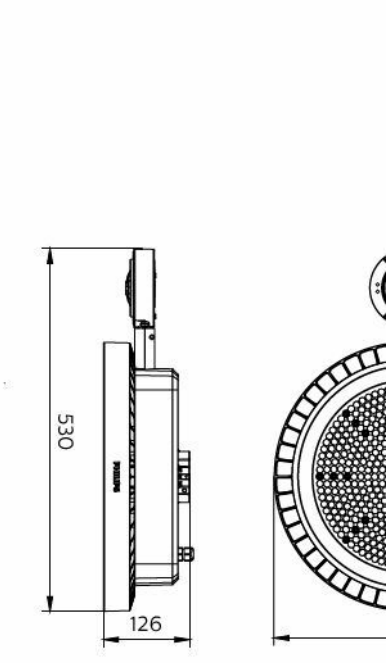

BY698X G5 LED250/NW Connected NB GM

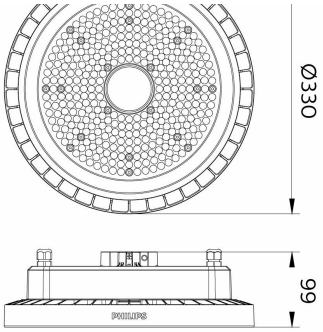

BY698P G5 LED105/CW PSD WB LA

BY698X G5 LED300/NW L1W MW WB GM

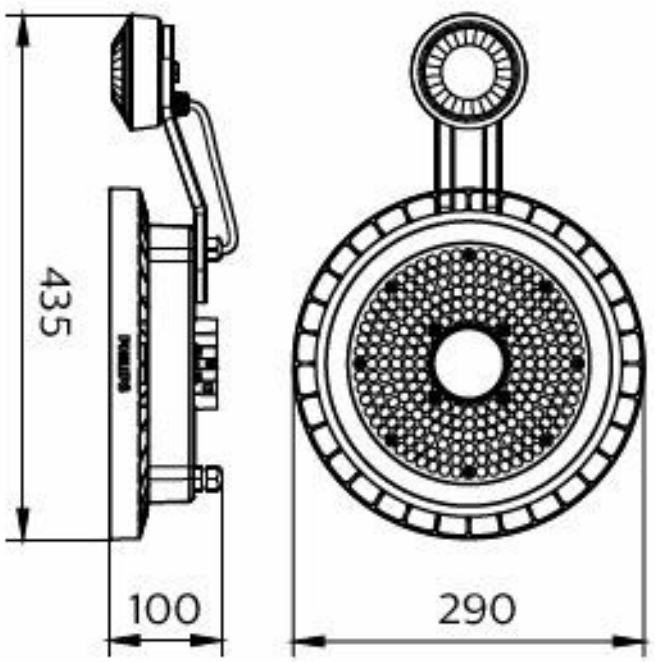

BY698X G5 LED105/CW L1W PIR WB GM

Product details



GreenPerform Highbay G5



GreenPerform Highbay G5

General Information

Number of gear units	1 unit
Gear	-
Driver included	Yes

Light Technical

Color rendering index (CRI)	80
Number of light sources	1
Beam angle of light source	115 degree(s)

Operating and Electrical

Input Voltage	220 to 240 V
Line Frequency	50 or 60 Hz
Suitable for random switching	Yes
Protection class IEC	Safety class I

Mechanical and Housing

Housing Color	Grey
Optical cover type	Clear dome

Approval and Application

Flammability mark	For mounting on normally flammable surfaces
CE mark	Yes
ENEC mark	-

Light Technical

Order Code	Full Product Name	Luminous Flux	Correlated Color Temperature (Nom)	Luminous Efficacy (rated) (Nom)	Optic type
911401549545	BY698X G5 LED105/NW L1W PIR WB GC	10,500 lm	4000 K	166 lm/W	Wide beam
911401549645	BY698X G5 LED105/CW L1W PIR WB GC	10,500 lm	6500 K	166 lm/W	Wide beam
911401549745	BY698X G5 LED150/NW L1W PIR WB GC	15,000 lm	4000 K	170 lm/W	Wide beam
911401549845	BY698X G5 LED150/CW L1W PIR WB GC	15,000 lm	6500 K	170 lm/W	Wide beam
911401549945	BY698X G5 LED200/NW L1W PIR WB GC	20,500 lm	4000 K	169 lm/W	Wide beam
911401550045	BY698X G5 LED200/CW L1W PIR WB GC	20,500 lm	6500 K	169 lm/W	Wide beam
911401550145	BY698X G5 LED250/NW L1W PIR WB GC	25,000 lm	4000 K	173 lm/W	Wide beam
911401550245	BY698X G5 LED250/CW L1W PIR WB GC	25,000 lm	6500 K	173 lm/W	Wide beam
911401550345	BY698X G5 LED300/NW L1W PIR WB GC	31,000 lm	4000 K	171 lm/W	Wide beam
911401550445	BY698X G5 LED300/CW L1W PIR WB GC	31,000 lm	6500 K	171 lm/W	Wide beam
911401550545	BY698X G5 LED105/NW L1W PIR WB GM	10,500 lm	4000 K	166 lm/W	Wide beam

Order Code	Full Product Name	Luminous Flux	Correlated Color Temperature (Nom)	Luminous Efficacy (rated) (Nom)	Optic type
911401550645	BY698X G5 LED105/CW L1W PIR WB GM	10,500 lm	6500 K	166 lm/W	Wide beam
911401550745	BY698X G5 LED150/NW L1W PIR WB GM	15,000 lm	4000 K	170 lm/W	Wide beam
911401550845	BY698X G5 LED150/CW L1W PIR WB GM	15,000 lm	6500 K	170 lm/W	Wide beam
911401550945	BY698X G5 LED200/NW L1W PIR WB GM	20,500 lm	4000 K	169 lm/W	Wide beam
911401551045	BY698X G5 LED200/CW L1W PIR WB GM	20,500 lm	6500 K	169 lm/W	Wide beam
911401551145	BY698X G5 LED250/NW L1W PIR WB GM	25,000 lm	4000 K	173 lm/W	Wide beam
911401551245	BY698X G5 LED250/CW L1W PIR WB GM	25,000 lm	6500 K	173 lm/W	Wide beam
911401551345	BY698X G5 LED300/NW L1W PIR WB GM	31,000 lm	4000 K	171 lm/W	Wide beam
911401551445	BY698X G5 LED300/CW L1W PIR WB GM	31,000 lm	6500 K	171 lm/W	Wide beam
911401551545	BY698X G5 LED105/840 L1W PIR WB CAU	10,500 lm	4000 K	166 lm/W	Wide beam
911401551645	BY698X G5 LED150/840 L1W PIR WB CAU	15,000 lm	4000 K	170 lm/W	Wide beam
911401551745	BY698X G5 LED200/840 L1W PIR WB CAU	20,500 lm	4000 K	169 lm/W	Wide beam
911401551845	BY698X G5 LED250/840 L1W PIR WB CAU	25,000 lm	4000 K	173 lm/W	Wide beam
911401551945	BY698X G5 LED300/840 L1W PIR WB CAU	31,000 lm	4000 K	171 lm/W	Wide beam
911401552045	BY698X G5 LED105/NW L1W PIR WB GM L3m	10,500 lm	4000 K	166 lm/W	Wide beam
911401552145	BY698X G5 LED105/CW L1W PIR WB GM L3m	10,500 lm	6500 K	166 lm/W	Wide beam
911401552245	BY698X G5 LED150/NW L1W PIR WB GM L3m	15,000 lm	4000 K	170 lm/W	Wide beam
911401552345	BY698X G5 LED150/CW L1W PIR WB GM L3m	15,000 lm	6500 K	170 lm/W	Wide beam
911401552445	BY698X G5 LED200/NW L1W PIR WB GM L3m	20,500 lm	4000 K	169 lm/W	Wide beam
911401552545	BY698X G5 LED200/CW L1W PIR WB GM L3m	20,500 lm	6500 K	169 lm/W	Wide beam
911401552645	BY698X G5 LED250/NW L1W PIR WB GM L3m	25,000 lm	4000 K	173 lm/W	Wide beam
911401552745	BY698X G5 LED250/CW L1W PIR WB GM L3m	25,000 lm	6500 K	173 lm/W	Wide beam
911401552845	BY698X G5 LED300/NW L1W PIR WB GM L3m	31,000 lm	4000 K	171 lm/W	Wide beam
911401552945	BY698X G5 LED300/CW L1W PIR WB GM L3m	31,000 lm	6500 K	171 lm/W	Wide beam
911401526245	BY698P G5 LED105/NW PSU WB GC	10,500 lm	4000 K	166 lm/W	Wide beam
911401526345	BY698P G5 LED105/NW PSU NB GC	10,500 lm	4000 K	166 lm/W	Narrow beam
911401526445	BY698P G5 LED105/CW PSU WB GC	10,500 lm	6500 K	166 lm/W	Wide beam
911401526545	BY698P G5 LED105/CW PSU NB GC	10,500 lm	6500 K	166 lm/W	Narrow beam
911401526645	BY698P G5 LED150/NW PSU WB GC	15,000 lm	4000 K	170 lm/W	Wide beam
911401526745	BY698P G5 LED150/NW PSU NB GC	15,000 lm	4000 K	170 lm/W	Narrow beam
911401526845	BY698P G5 LED150/CW PSU WB GC	15,000 lm	6500 K	170 lm/W	Wide beam
911401526945	BY698P G5 LED150/CW PSU NB GC	15,000 lm	6500 K	170 lm/W	Narrow beam
911401527045	BY698P G5 LED200/NW PSU WB GC	20,500 lm	4000 K	169 lm/W	Wide beam
911401527145	BY698P G5 LED200/NW PSU NB GC	20,500 lm	4000 K	169 lm/W	Narrow beam
911401527245	BY698P G5 LED200/CW PSU WB GC	20,500 lm	6500 K	169 lm/W	Wide beam
911401527345	BY698P G5 LED200/CW PSU NB GC	20,500 lm	6500 K	169 lm/W	Narrow beam
911401527445	BY698P G5 LED250/NW PSU WB GC	25,000 lm	4000 K	173 lm/W	Wide beam
911401527545	BY698P G5 LED250/NW PSU NB GC	25,000 lm	4000 K	173 lm/W	Narrow beam
911401527645	BY698P G5 LED250/CW PSU WB GC	25,000 lm	6500 K	173 lm/W	Wide beam
911401527745	BY698P G5 LED250/CW PSU NB GC	25,000 lm	6500 K	173 lm/W	Narrow beam
911401527845	BY698P G5 LED300/NW PSU WB GC	31,000 lm	4000 K	171 lm/W	Wide beam
911401527945	BY698P G5 LED300/NW PSU NB GC	31,000 lm	4000 K	171 lm/W	Narrow beam

Order Code	Full Product Name	Luminous Flux	Correlated Color Temperature (Nom)	Luminous Efficacy (rated) (Nom)	Optic type
911401528045	BY698P G5 LED300/CW PSU WB GC	31,000 lm	6500 K	171 lm/W	Wide beam
911401528145	BY698P G5 LED300/CW PSU NB GC	31,000 lm	6500 K	171 lm/W	Narrow beam
911401528245	BY698P G5 LED105/NW PSU WB GM	10,500 lm	4000 K	166 lm/W	Wide beam
911401528345	BY698P G5 LED105/NW PSU NB GM	10,500 lm	4000 K	166 lm/W	Narrow beam
911401528445	BY698P G5 LED105/CW PSU WB GM	10,500 lm	6500 K	166 lm/W	Wide beam
911401528545	BY698P G5 LED105/CW PSU NB GM	10,500 lm	6500 K	166 lm/W	Narrow beam
911401528645	BY698P G5 LED150/NW PSU WB GM	15,000 lm	4000 K	170 lm/W	Wide beam
911401528745	BY698P G5 LED150/NW PSU NB GM	15,000 lm	4000 K	170 lm/W	Narrow beam
911401528845	BY698P G5 LED150/CW PSU WB GM	15,000 lm	6500 K	170 lm/W	Wide beam
911401528945	BY698P G5 LED150/CW PSU NB GM	15,000 lm	6500 K	170 lm/W	Narrow beam
911401529045	BY698P G5 LED200/NW PSU WB GM	20,500 lm	4000 K	169 lm/W	Wide beam
911401529145	BY698P G5 LED200/NW PSU NB GM	20,500 lm	4000 K	169 lm/W	Narrow beam
911401529245	BY698P G5 LED200/CW PSU WB GM	20,500 lm	6500 K	169 lm/W	Wide beam
911401529345	BY698P G5 LED200/CW PSU NB GM	20,500 lm	6500 K	169 lm/W	Narrow beam
911401529445	BY698P G5 LED250/NW PSU WB GM	25,000 lm	4000 K	173 lm/W	Wide beam
911401529545	BY698P G5 LED250/NW PSU NB GM	25,000 lm	4000 K	173 lm/W	Narrow beam
911401529645	BY698P G5 LED250/CW PSU WB GM	25,000 lm	6500 K	173 lm/W	Wide beam
911401529745	BY698P G5 LED250/CW PSU NB GM	25,000 lm	6500 K	173 lm/W	Narrow beam
911401529845	BY698P G5 LED300/NW PSU WB GM	31,000 lm	4000 K	171 lm/W	Wide beam
911401529945	BY698P G5 LED300/NW PSU NB GM	31,000 lm	4000 K	171 lm/W	Narrow beam
911401530045	BY698P G5 LED300/CW PSU WB GM	31,000 lm	6500 K	171 lm/W	Wide beam
911401530145	BY698P G5 LED300/CW PSU NB GM	31,000 lm	6500 K	171 lm/W	Narrow beam
911401530245	BY698P G5 LED200/840 PSU WB CAU	20,500 lm	6500 K	169 lm/W	Wide beam
911401530345	BY698P G5 LED250/840 PSU WB CAU	25,000 lm	6500 K	173 lm/W	Wide beam
911401530445	BY698P G5 LED300/840 PSU WB CAU	31,000 lm	6500 K	171 lm/W	Wide beam
911401530545	BY698P G5 LED200/840 PSU WB CAU CL	20,500 lm	6500 K	169 lm/W	Wide beam
911401530645	BY698P G5 LED200/850 PSU WB CAU CL	20,500 lm	5000 K	169 lm/W	Wide beam
911401530745	BY698P G5 LED250/840 PSU WB CAU CL	25,000 lm	4000 K	173 lm/W	Wide beam
911401530845	BY698P G5 LED250/850 PSU WB CAU CL	25,000 lm	5000 K	173 lm/W	Wide beam
911401530945	BY698P G5 LED300/840 PSU WB CAU CL	31,000 lm	4000 K	171 lm/W	Wide beam
911401531045	BY698P G5 LED300/850 PSU WB CAU CL	31,000 lm	5000 K	171 lm/W	Wide beam
911401531145	BY698P G5 LED105/NW PSD WB GC	10,500 lm	4000 K	152 lm/W	Wide beam
911401531245	BY698P G5 LED105/NW PSD NB GC	10,500 lm	4000 K	152 lm/W	Narrow beam
911401531345	BY698P G5 LED105/CW PSD WB GC	10,500 lm	6500 K	152 lm/W	Wide beam
911401531445	BY698P G5 LED105/CW PSD NB GC	10,500 lm	6500 K	152 lm/W	Narrow beam
911401531545	BY698P G5 LED150/NW PSD WB GC	15,000 lm	4000 K	161 lm/W	Wide beam
911401531645	BY698P G5 LED150/NW PSD NB GC	15,000 lm	4000 K	161 lm/W	Narrow beam
911401531745	BY698P G5 LED150/CW PSD WB GC	15,000 lm	6500 K	161 lm/W	Wide beam
911401531845	BY698P G5 LED150/CW PSD NB GC	15,000 lm	6500 K	161 lm/W	Narrow beam
911401531945	BY698P G5 LED200/NW PSD WB GC	20,500 lm	4000 K	162 lm/W	Wide beam
911401532045	BY698P G5 LED200/NW PSD NB GC	20,500 lm	4000 K	162 lm/W	Narrow beam
911401532145	BY698P G5 LED200/CW PSD WB GC	20,500 lm	6500 K	162 lm/W	Wide beam

Order Code	Full Product Name	Luminous Flux	Correlated Color Temperature (Nom)	Luminous Efficacy (rated) (Nom)	Optic type
911401532245	BY698P G5 LED200/CW PSD NB GC	20,500 lm	6500 K	162 lm/W	Narrow beam
911401532345	BY698P G5 LED250/NW PSD WB GC	25,000 lm	4000 K	162 lm/W	Wide beam
911401532445	BY698P G5 LED250/NW PSD NB GC	25,000 lm	4000 K	162 lm/W	Narrow beam
911401532545	BY698P G5 LED250/CW PSD WB GC	25,000 lm	6500 K	162 lm/W	Wide beam
911401532645	BY698P G5 LED250/CW PSD NB GC	25,000 lm	6500 K	162 lm/W	Narrow beam
911401532745	BY698P G5 LED300/NW PSD WB GC	31,000 lm	4000 K	163 lm/W	Wide beam
911401532845	BY698P G5 LED300/NW PSD NB GC	31,000 lm	4000 K	163 lm/W	Narrow beam
911401532945	BY698P G5 LED300/CW PSD WB GC	31,000 lm	6500 K	163 lm/W	Wide beam
911401533045	BY698P G5 LED300/CW PSD NB GC	31,000 lm	6500 K	163 lm/W	Narrow beam
911401533145	BY698P G5 LED105/NW PSD WB GM	10,500 lm	4000 K	152 lm/W	Wide beam
911401533245	BY698P G5 LED105/NW PSD NB GM	10,500 lm	4000 K	152 lm/W	Narrow beam
911401533345	BY698P G5 LED105/CW PSD WB GM	10,500 lm	6500 K	152 lm/W	Wide beam
911401533445	BY698P G5 LED105/CW PSD NB GM	10,500 lm	6500 K	152 lm/W	Narrow beam
911401533545	BY698P G5 LED150/NW PSD WB GM	15,000 lm	4000 K	161 lm/W	Wide beam
911401533645	BY698P G5 LED150/NW PSD NB GM	15,000 lm	4000 K	161 lm/W	Narrow beam
911401533745	BY698P G5 LED150/CW PSD WB GM	15,000 lm	6500 K	161 lm/W	Wide beam
911401533845	BY698P G5 LED150/CW PSD NB GM	15,000 lm	6500 K	161 lm/W	Narrow beam
911401533945	BY698P G5 LED200/NW PSD WB GM	20,500 lm	4000 K	162 lm/W	Wide beam
911401534045	BY698P G5 LED200/NW PSD NB GM	20,500 lm	4000 K	162 lm/W	Narrow beam
911401534145	BY698P G5 LED200/CW PSD WB GM	20,500 lm	6500 K	162 lm/W	Wide beam
911401534245	BY698P G5 LED200/CW PSD NB GM	20,500 lm	6500 K	162 lm/W	Narrow beam
911401534345	BY698P G5 LED250/NW PSD WB GM	25,000 lm	4000 K	162 lm/W	Wide beam
911401534445	BY698P G5 LED250/NW PSD NB GM	25,000 lm	4000 K	162 lm/W	Narrow beam
911401534545	BY698P G5 LED250/CW PSD WB GM	25,000 lm	6500 K	162 lm/W	Wide beam
911401534645	BY698P G5 LED250/CW PSD NB GM	25,000 lm	6500 K	162 lm/W	Narrow beam
911401534745	BY698P G5 LED300/NW PSD WB GM	31,000 lm	4000 K	163 lm/W	Wide beam
911401534845	BY698P G5 LED300/NW PSD NB GM	31,000 lm	4000 K	163 lm/W	Narrow beam
911401534945	BY698P G5 LED300/CW PSD WB GM	31,000 lm	6500 K	163 lm/W	Wide beam
911401535045	BY698P G5 LED300/CW PSD NB GM	31,000 lm	6500 K	163 lm/W	Narrow beam
911401535145	BY698P G5 LED200/840 PSD WB CAU	20,500 lm	4000 K	162 lm/W	Wide beam
911401535245	BY698P G5 LED250/840 PSD WB CAU	25,000 lm	4000 K	162 lm/W	Wide beam
911401535445	BY698P G5 LED300/840 PSD WB CAU	31,000 lm	4000 K	163 lm/W	Wide beam
911401535545	BY698P G5 LED105/NW PSU WB LA	10,500 lm	4000 K	166 lm/W	Wide beam
911401535645	BY698P G5 LED105/CW PSU WB LA	10,500 lm	6500 K	166 lm/W	Wide beam
911401535745	BY698P G5 LED150/NW PSU WB LA	15,000 lm	4000 K	170 lm/W	Wide beam
911401535845	BY698P G5 LED150/CW PSU WB LA	15,000 lm	6500 K	170 lm/W	Wide beam
911401535945	BY698P G5 LED200/NW PSU WB LA	20,500 lm	4000 K	169 lm/W	Wide beam
911401536045	BY698P G5 LED200/NW PSU NB LA	20,500 lm	4000 K	169 lm/W	Narrow beam
911401536145	BY698P G5 LED200/CW PSU WB LA	20,500 lm	6500 K	169 lm/W	Wide beam
911401536245	BY698P G5 LED200/CW PSU NB LA	20,500 lm	6500 K	169 lm/W	Narrow beam
911401536345	BY698P G5 LED250/NW PSU WB LA	25,000 lm	4000 K	173 lm/W	Wide beam
911401536445	BY698P G5 LED250/NW PSU NB LA	25,000 lm	4000 K	173 lm/W	Narrow beam

Order Code	Full Product Name	Luminous Flux	Correlated Color Temperature (Nom)	Luminous Efficacy (rated) (Nom)	Optic type
911401536545	BY698P G5 LED250/CW PSU WB LA	25,000 lm	6500 K	173 lm/W	Wide beam
911401536645	BY698P G5 LED250/CW PSU NB LA	25,000 lm	6500 K	173 lm/W	Narrow beam
911401536745	BY698P G5 LED300/NW PSU WB LA	31,000 lm	4000 K	171 lm/W	Wide beam
911401536845	BY698P G5 LED300/NW PSU NB LA	31,000 lm	4000 K	171 lm/W	Narrow beam
911401536945	BY698P G5 LED300/CW PSU WB LA	31,000 lm	6500 K	171 lm/W	Wide beam
911401537045	BY698P G5 LED300/CW PSU NB LA	31,000 lm	6500 K	171 lm/W	Narrow beam
911401537145	BY698P G5 LED105/NW PSD WB LA	10,500 lm	4000 K	152 lm/W	Wide beam
911401537245	BY698P G5 LED105/CW PSD WB LA	10,500 lm	6500 K	152 lm/W	Wide beam
911401537345	BY698P G5 LED150/NW PSD WB LA	15,000 lm	4000 K	161 lm/W	Wide beam
911401537445	BY698P G5 LED150/CW PSD WB LA	15,000 lm	6500 K	161 lm/W	Wide beam
911401537545	BY698P G5 LED200/NW PSD WB LA	20,500 lm	4000 K	162 lm/W	Wide beam
911401537645	BY698P G5 LED200/NW PSD NB LA	20,500 lm	4000 K	162 lm/W	Narrow beam
911401537745	BY698P G5 LED200/CW PSD WB LA	20,500 lm	6500 K	162 lm/W	Wide beam
911401537845	BY698P G5 LED200/CW PSD NB LA	20,500 lm	6500 K	162 lm/W	Narrow beam
911401537945	BY698P G5 LED250/NW PSD WB LA	25,000 lm	4000 K	162 lm/W	Wide beam
911401538045	BY698P G5 LED250/NW PSD NB LA	25,000 lm	4000 K	162 lm/W	Narrow beam
911401538145	BY698P G5 LED250/CW PSD WB LA	25,000 lm	6500 K	162 lm/W	Wide beam
911401538245	BY698P G5 LED250/CW PSD NB LA	25,000 lm	6500 K	162 lm/W	Narrow beam
911401538345	BY698P G5 LED300/NW PSD WB LA	31,000 lm	4000 K	163 lm/W	Wide beam
911401538445	BY698P G5 LED300/NW PSD NB LA	31,000 lm	4000 K	163 lm/W	Narrow beam
911401538545	BY698P G5 LED300/CW PSD WB LA	31,000 lm	6500 K	163 lm/W	Wide beam
911401538645	BY698P G5 LED300/CW PSD NB LA	31,000 lm	6500 K	163 lm/W	Narrow beam
911401538745	BY698P G5 LED105/NW PSU WB GM L3m	10,500 lm	4000 K	166 lm/W	Wide beam
911401538845	BY698P G5 LED105/NW PSU NB GM L3m	10,500 lm	4000 K	166 lm/W	Narrow beam
911401538945	BY698P G5 LED105/CW PSU WB GM L3m	10,500 lm	6500 K	166 lm/W	Wide beam
911401539045	BY698P G5 LED105/CW PSU NB GM L3m	10,500 lm	6500 K	166 lm/W	Narrow beam
911401539145	BY698P G5 LED150/NW PSU WB GM L3m	15,000 lm	4000 K	170 lm/W	Wide beam
911401539245	BY698P G5 LED150/NW PSU NB GM L3m	15,000 lm	4000 K	170 lm/W	Narrow beam
911401539345	BY698P G5 LED150/CW PSU WB GM L3m	15,000 lm	6500 K	170 lm/W	Wide beam
911401539445	BY698P G5 LED150/CW PSU NB GM L3m	15,000 lm	6500 K	170 lm/W	Narrow beam
911401539545	BY698P G5 LED200/NW PSU WB GM L3m	20,500 lm	4000 K	169 lm/W	Wide beam
911401539645	BY698P G5 LED200/NW PSU NB GM L3m	20,500 lm	4000 K	169 lm/W	Narrow beam
911401539745	BY698P G5 LED200/CW PSU WB GM L3m	20,500 lm	6500 K	169 lm/W	Wide beam
911401539845	BY698P G5 LED200/CW PSU NB GM L3m	20,500 lm	6500 K	169 lm/W	Narrow beam
911401539945	BY698P G5 LED250/NW PSU WB GM L3m	25,000 lm	4000 K	173 lm/W	Wide beam
911401540045	BY698P G5 LED250/NW PSU NB GM L3m	25,000 lm	4000 K	173 lm/W	Narrow beam
911401540145	BY698P G5 LED250/CW PSU WB GM L3m	25,000 lm	6500 K	173 lm/W	Wide beam
911401540245	BY698P G5 LED250/CW PSU NB GM L3m	25,000 lm	6500 K	173 lm/W	Narrow beam
911401540345	BY698P G5 LED300/NW PSU WB GM L3m	31,000 lm	4000 K	171 lm/W	Wide beam
911401540445	BY698P G5 LED300/NW PSU NB GM L3m	31,000 lm	4000 K	171 lm/W	Narrow beam
911401540545	BY698P G5 LED300/CW PSU WB GM L3m	31,000 lm	6500 K	171 lm/W	Wide beam
911401540645	BY698P G5 LED300/CW PSU NB GM L3m	31,000 lm	6500 K	171 lm/W	Narrow beam

Order Code	Full Product Name	Luminous Flux	Correlated Color Temperature (Nom)	Luminous Efficacy (rated) (Nom)	Optic type
911401540745	BY690P LED105/NW PSU WB GC	10,500 lm	4000 K	166 lm/W	Wide beam
911401540845	BY690P LED105/CW PSU WB GC	10,500 lm	6500 K	166 lm/W	Wide beam
911401540945	BY690P LED150/NW PSU WB GC	15,000 lm	4000 K	170 lm/W	Wide beam
911401541045	BY690P LED150/CW PSU WB GC	15,000 lm	6500 K	170 lm/W	Wide beam
911401541145	BY690P LED200/NW PSU WB GC	20,000 lm	4000 K	181 lm/W	Wide beam
911401541245	BY690P LED200/CW PSU WB GC	20,000 lm	6500 K	181 lm/W	Wide beam
911401541345	BY690P LED250/NW PSU WB GC	25,500 lm	4000 K	177 lm/W	Wide beam
911401541445	BY690P LED250/CW PSU WB GC	25,500 lm	6500 K	177 lm/W	Wide beam
911401541545	BY690P LED300/NW PSU WB GC	30,000 lm	4000 K	176 lm/W	Wide beam
911401541645	BY690P LED300/CW PSU WB GC	30,000 lm	6500 K	176 lm/W	Wide beam
911401541745	BY690P LED105/NW PSU WB GM	10,500 lm	4000 K	166 lm/W	Wide beam
911401541845	BY690P LED105/CW PSU WB GM	10,500 lm	6500 K	166 lm/W	Wide beam
911401541945	BY690P LED150/NW PSU WB GM	15,000 lm	4000 K	170 lm/W	Wide beam
911401542045	BY690P LED150/CW PSU WB GM	15,000 lm	6500 K	170 lm/W	Wide beam
911401542145	BY690P LED200/NW PSU WB GM	20,000 lm	4000 K	181 lm/W	Wide beam
911401542245	BY690P LED200/CW PSU WB GM	20,000 lm	6500 K	181 lm/W	Wide beam
911401542345	BY690P LED250/NW PSU WB GM	25,500 lm	4000 K	177 lm/W	Wide beam
911401542445	BY690P LED250/CW PSU WB GM	25,500 lm	6500 K	177 lm/W	Wide beam
911401542545	BY690P LED300/NW PSU WB GM	30,000 lm	4000 K	176 lm/W	Wide beam
911401542645	BY690P LED300/CW PSU WB GM	30,000 lm	6500 K	176 lm/W	Wide beam
911401580944	BY698P G5 LED105/NW PSU WB TW	10,500 lm	4000 K	166 lm/W	Wide beam
911401581044	BY698P G5 LED105/NW PSU NB TW	10,500 lm	4000 K	166 lm/W	Narrow beam
911401581144	BY698P G5 LED105/CW PSU WB TW	10,500 lm	6500 K	166 lm/W	Wide beam
911401581244	BY698P G5 LED105/CW PSU NB TW	10,500 lm	6500 K	166 lm/W	Narrow beam
911401581344	BY698P G5 LED150/NW PSU WB TW	15,000 lm	4000 K	170 lm/W	Wide beam
911401581444	BY698P G5 LED150/NW PSU NB TW	15,000 lm	4000 K	170 lm/W	Narrow beam
911401581544	BY698P G5 LED150/CW PSU WB TW	15,000 lm	6500 K	170 lm/W	Wide beam
911401581644	BY698P G5 LED150/CW PSU NB TW	15,000 lm	6500 K	170 lm/W	Narrow beam
911401581744	BY698P G5 LED200/NW PSU WB TW	20,500 lm	4000 K	169 lm/W	Wide beam
911401581844	BY698P G5 LED200/NW PSU NB TW	20,500 lm	4000 K	169 lm/W	Narrow beam
911401581944	BY698P G5 LED200/CW PSU WB TW	20,500 lm	6500 K	169 lm/W	Wide beam
911401582044	BY698P G5 LED200/CW PSU NB TW	20,500 lm	6500 K	169 lm/W	Narrow beam
911401582144	BY698P G5 LED250/NW PSU WB TW	25,000 lm	4000 K	173 lm/W	Wide beam
911401582244	BY698P G5 LED250/NW PSU NB TW	25,000 lm	4000 K	173 lm/W	Narrow beam
911401582344	BY698P G5 LED250/CW PSU WB TW	25,000 lm	6500 K	173 lm/W	Wide beam
911401582444	BY698P G5 LED250/CW PSU NB TW	25,000 lm	6500 K	173 lm/W	Narrow beam
911401582544	BY698P G5 LED300/NW PSU WB TW	31,000 lm	4000 K	171 lm/W	Wide beam
911401582644	BY698P G5 LED300/NW PSU NB TW	31,000 lm	4000 K	171 lm/W	Narrow beam
911401582744	BY698P G5 LED300/CW PSU WB TW	31,000 lm	6500 K	171 lm/W	Wide beam
911401582844	BY698P G5 LED300/CW PSU NB TW	31,000 lm	6500 K	171 lm/W	Narrow beam
911401543245	BY698X G5 LED150/NW Connected WB GC	15,000 lm	4000 K	174 lm/W	Wide beam
911401543345	BY698X G5 LED150/CW Connected WB GC	15,000 lm	6500 K	174 lm/W	Wide beam

Order Code	Full Product Name	Luminous Flux	Correlated Color Temperature (Nom)	Luminous Efficacy (rated) (Nom)	Optic type
911401543445	BY698X G5 LED200/NW Connected WB GC	20,500 lm	4000 K	168 lm/W	Wide beam
911401543545	BY698X G5 LED200/CW Connected WB GC	20,500 lm	6500 K	168 lm/W	Wide beam
911401543645	BY698X G5 LED250/NW Connected WB GC	25,000 lm	4000 K	170 lm/W	Wide beam
911401543745	BY698X G5 LED250/CW Connected WB GC	25,000 lm	6500 K	170 lm/W	Wide beam
911401543845	BY698X G5 LED300/NW Connected WB GC	31,000 lm	4000 K	170 lm/W	Wide beam
911401543945	BY698X G5 LED300/NW Connected NB GC	31,000 lm	4000 K	170 lm/W	Narrow beam
911401544045	BY698X G5 LED300/CW Connected WB GC	31,000 lm	6500 K	170 lm/W	Wide beam
911401544145	BY698X G5 LED300/CW Connected NB GC	31,000 lm	6500 K	170 lm/W	Narrow beam
911401544245	BY698X G5 LED150/NW Connected WB GM	15,000 lm	4000 K	174 lm/W	Wide beam
911401544345	BY698X G5 LED150/NW Connected NB GM	15,000 lm	4000 K	174 lm/W	Narrow beam
911401544445	BY698X G5 LED150/CW Connected WB GM	15,000 lm	6500 K	174 lm/W	Wide beam
911401544545	BY698X G5 LED150/CW Connected NB GM	15,000 lm	6500 K	174 lm/W	Narrow beam
911401544645	BY698X G5 LED200/NW Connected WB GM	20,500 lm	4000 K	168 lm/W	Wide beam
911401544745	BY698X G5 LED200/NW Connected NB GM	20,500 lm	4000 K	168 lm/W	Narrow beam
911401544845	BY698X G5 LED200/CW Connected WB GM	20,500 lm	6500 K	168 lm/W	Wide beam
911401544945	BY698X G5 LED200/CW Connected NB GM	20,500 lm	6500 K	168 lm/W	Narrow beam
911401545045	BY698X G5 LED250/NW Connected WB GM	25,000 lm	4000 K	170 lm/W	Wide beam
911401545145	BY698X G5 LED250/NW Connected NB GM	25,000 lm	4000 K	170 lm/W	Narrow beam
911401545245	BY698X G5 LED250/CW Connected WB GM	25,000 lm	6500 K	170 lm/W	Wide beam
911401545345	BY698X G5 LED250/CW Connected NB GM	25,000 lm	6500 K	170 lm/W	Narrow beam
911401545445	BY698X G5 LED300/NW Connected WB GM	31,000 lm	4000 K	170 lm/W	Wide beam
911401545545	BY698X G5 LED300/NW Connected NB GM	31,000 lm	4000 K	170 lm/W	Narrow beam
911401545645	BY698X G5 LED300/CW Connected WB GM	31,000 lm	6500 K	170 lm/W	Wide beam
911401545745	BY698X G5 LED300/CW Connected NB GM	31,000 lm	6500 K	170 lm/W	Narrow beam
911401545845	BY698X G5 LED200/840 Connected WB CAU	20,500 lm	4000 K	168 lm/W	Wide beam
911401545945	BY698X G5 LED250/840 Connected WB CAU	25,000 lm	4000 K	170 lm/W	Wide beam
911401546045	BY698X G5 LED300/840 Connected WB CAU	31,000 lm	4000 K	170 lm/W	Wide beam
911401546145	BY698X G5 LED150/NW Connected WB LA	15,000 lm	4000 K	174 lm/W	Wide beam
911401546245	BY698X G5 LED150/CW Connected WB LA	15,000 lm	6500 K	174 lm/W	Wide beam
911401546345	BY698X G5 LED200/NW Connected WB LA	20,500 lm	4000 K	168 lm/W	Wide beam
911401546445	BY698X G5 LED200/NW Connected NB LA	20,500 lm	4000 K	168 lm/W	Narrow beam
911401546545	BY698X G5 LED200/CW Connected WB LA	20,500 lm	6500 K	168 lm/W	Wide beam
911401546645	BY698X G5 LED200/CW Connected NB LA	20,500 lm	6500 K	168 lm/W	Narrow beam
911401546745	BY698X G5 LED250/NW Connected WB LA	25,000 lm	4000 K	170 lm/W	Wide beam
911401546845	BY698X G5 LED250/NW Connected NB LA	25,000 lm	4000 K	170 lm/W	Narrow beam
911401546945	BY698X G5 LED250/CW Connected WB LA	25,000 lm	6500 K	170 lm/W	Wide beam
911401547045	BY698X G5 LED250/CW Connected NB LA	25,000 lm	6500 K	170 lm/W	Narrow beam
911401547145	BY698X G5 LED300/NW Connected WB LA	31,000 lm	4000 K	170 lm/W	Wide beam
911401547245	BY698X G5 LED300/NW Connected NB LA	31,000 lm	4000 K	170 lm/W	Narrow beam
911401547345	BY698X G5 LED300/CW Connected WB LA	31,000 lm	6500 K	170 lm/W	Wide beam
911401547445	BY698X G5 LED300/CW Connected NB LA	31,000 lm	6500 K	170 lm/W	Narrow beam
911401547545	BY698X G5 LED105/NW L1W MW WB GM	10,500 lm	4000 K	166 lm/W	Wide beam

Order Code	Full Product Name	Luminous Flux	Correlated Color Temperature (Nom)	Luminous Efficacy (rated) (Nom)	Optic type
911401547645	BY698X G5 LED105/CW L1W MW WB GM	10,500 lm	6500 K	166 lm/W	Wide beam
911401547745	BY698X G5 LED150/NW L1W MW WB GM	15,000 lm	4000 K	170 lm/W	Wide beam
911401547845	BY698X G5 LED150/CW L1W MW WB GM	15,000 lm	6500 K	170 lm/W	Wide beam
911401547945	BY698X G5 LED200/NW L1W MW WB GM	20,500 lm	4000 K	169 lm/W	Wide beam
911401548045	BY698X G5 LED200/CW L1W MW WB GM	20,500 lm	6500 K	169 lm/W	Wide beam
911401548145	BY698X G5 LED250/NW L1W MW WB GM	25,000 lm	4000 K	173 lm/W	Wide beam
911401548245	BY698X G5 LED250/CW L1W MW WB GM	25,000 lm	6500 K	173 lm/W	Wide beam
911401548345	BY698X G5 LED300/NW L1W MW WB GM	31,000 lm	4000 K	171 lm/W	Wide beam
911401548445	BY698X G5 LED300/CW L1W MW WB GM	31,000 lm	6500 K	171 lm/W	Wide beam
911401548545	BY698X G5 LED105/NW L1W MW WB GM L3m	10,500 lm	4000 K	166 lm/W	Wide beam
911401548645	BY698X G5 LED105/CW L1W MW WB GM L3m	10,500 lm	6500 K	166 lm/W	Wide beam
911401548745	BY698X G5 LED150/NW L1W MW WB GM L3m	15,000 lm	4000 K	170 lm/W	Wide beam
911401548845	BY698X G5 LED150/CW L1W MW WB GM L3m	15,000 lm	6500 K	170 lm/W	Wide beam
911401548945	BY698X G5 LED200/NW L1W MW WB GM L3m	20,500 lm	4000 K	169 lm/W	Wide beam
911401549045	BY698X G5 LED200/CW L1W MW WB GM L3m	20,500 lm	6500 K	169 lm/W	Wide beam
911401549145	BY698X G5 LED250/NW L1W MW WB GM L3m	25,000 lm	4000 K	173 lm/W	Wide beam
911401549245	BY698X G5 LED250/CW L1W MW WB GM L3m	25,000 lm	6500 K	173 lm/W	Wide beam
911401549345	BY698X G5 LED300/NW L1W MW WB GM L3m	31,000 lm	4000 K	171 lm/W	Wide beam
911401549445	BY698X G5 LED300/CW L1W MW WB GM L3m	31,000 lm	6500 K	171 lm/W	Wide beam

Operating and Electrical

Order Code	Full Product Name	Power Consumption
911401549545	BY698X G5 LED105/NW L1W PIR WB GC	63 W
911401549645	BY698X G5 LED105/CW L1W PIR WB GC	63 W
911401549745	BY698X G5 LED150/NW L1W PIR WB GC	88 W
911401549845	BY698X G5 LED150/CW L1W PIR WB GC	88 W
911401549945	BY698X G5 LED200/NW L1W PIR WB GC	121 W
911401550045	BY698X G5 LED200/CW L1W PIR WB GC	121 W
911401550145	BY698X G5 LED250/NW L1W PIR WB GC	144 W
911401550245	BY698X G5 LED250/CW L1W PIR WB GC	144 W
911401550345	BY698X G5 LED300/NW L1W PIR WB GC	181 W
911401550445	BY698X G5 LED300/CW L1W PIR WB GC	181 W
911401550545	BY698X G5 LED105/NW L1W PIR WB GM	63 W
911401550645	BY698X G5 LED105/CW L1W PIR WB GM	63 W
911401550745	BY698X G5 LED150/NW L1W PIR WB GM	88 W

Order Code	Full Product Name	Power Consumption
911401550845	BY698X G5 LED150/CW L1W PIR WB GM	88 W
911401550945	BY698X G5 LED200/NW L1W PIR WB GM	121 W
911401551045	BY698X G5 LED200/CW L1W PIR WB GM	121 W
911401551145	BY698X G5 LED250/NW L1W PIR WB GM	144 W
911401551245	BY698X G5 LED250/CW L1W PIR WB GM	144 W
911401551345	BY698X G5 LED300/NW L1W PIR WB GM	181 W
911401551445	BY698X G5 LED300/CW L1W PIR WB GM	181 W
911401551545	BY698X G5 LED105/840 L1W PIR WB CAU	63 W
911401551645	BY698X G5 LED150/840 L1W PIR WB CAU	88 W
911401551745	BY698X G5 LED200/840 L1W PIR WB CAU	121 W
911401551845	BY698X G5 LED250/840 L1W PIR WB CAU	144 W
911401551945	BY698X G5 LED300/840 L1W PIR WB CAU	181 W
911401552045	BY698X G5 LED105/NW L1W PIR WB GM L3m	63 W
911401552145	BY698X G5 LED105/CW L1W PIR WB GM L3m	63 W
911401552245	BY698X G5 LED150/NW L1W PIR WB GM L3m	88 W
911401552345	BY698X G5 LED150/CW L1W PIR WB GM L3m	88 W
911401552445	BY698X G5 LED200/NW L1W PIR WB GM L3m	121 W
911401552545	BY698X G5 LED200/CW L1W PIR WB GM L3m	121 W
911401552645	BY698X G5 LED250/NW L1W PIR WB GM L3m	144 W
911401552745	BY698X G5 LED250/CW L1W PIR WB GM L3m	144 W
911401552845	BY698X G5 LED300/NW L1W PIR WB GM L3m	181 W
911401552945	BY698X G5 LED300/CW L1W PIR WB GM L3m	181 W
911401526245	BY698P G5 LED105/NW PSU WB GC	63 W
911401526345	BY698P G5 LED105/NW PSU NB GC	63 W
911401526445	BY698P G5 LED105/CW PSU WB GC	63 W
911401526545	BY698P G5 LED105/CW PSU NB GC	63 W
911401526645	BY698P G5 LED150/NW PSU WB GC	88 W
911401526745	BY698P G5 LED150/NW PSU NB GC	88 W
911401526845	BY698P G5 LED150/CW PSU WB GC	88 W
911401526945	BY698P G5 LED150/CW PSU NB GC	88 W
911401527045	BY698P G5 LED200/NW PSU WB GC	121 W
911401527145	BY698P G5 LED200/NW PSU NB GC	121 W
911401527245	BY698P G5 LED200/CW PSU WB GC	121 W
911401527345	BY698P G5 LED200/CW PSU NB GC	121 W
911401527445	BY698P G5 LED250/NW PSU WB GC	144 W
911401527545	BY698P G5 LED250/NW PSU NB GC	144 W
911401527645	BY698P G5 LED250/CW PSU WB GC	144 W
911401527745	BY698P G5 LED250/CW PSU NB GC	144 W
911401527845	BY698P G5 LED300/NW PSU WB GC	181 W
911401527945	BY698P G5 LED300/NW PSU NB GC	181 W
911401528045	BY698P G5 LED300/CW PSU WB GC	181 W
911401528145	BY698P G5 LED300/CW PSU NB GC	181 W

Order Code	Full Product Name	Power Consumption
911401528245	BY698P G5 LED105/NW PSU WB GM	63 W
911401528345	BY698P G5 LED105/NW PSU NB GM	63 W
911401528445	BY698P G5 LED105/CW PSU WB GM	63 W
911401528545	BY698P G5 LED105/CW PSU NB GM	63 W
911401528645	BY698P G5 LED150/NW PSU WB GM	88 W
911401528745	BY698P G5 LED150/NW PSU NB GM	88 W
911401528845	BY698P G5 LED150/CW PSU WB GM	88 W
911401528945	BY698P G5 LED150/CW PSU NB GM	88 W
911401529045	BY698P G5 LED200/NW PSU WB GM	121 W
911401529145	BY698P G5 LED200/NW PSU NB GM	121 W
911401529245	BY698P G5 LED200/CW PSU WB GM	121 W
911401529345	BY698P G5 LED200/CW PSU NB GM	121 W
911401529445	BY698P G5 LED250/NW PSU WB GM	144 W
911401529545	BY698P G5 LED250/NW PSU NB GM	144 W
911401529645	BY698P G5 LED250/CW PSU WB GM	144 W
911401529745	BY698P G5 LED250/CW PSU NB GM	144 W
911401529845	BY698P G5 LED300/NW PSU WB GM	181 W
911401529945	BY698P G5 LED300/NW PSU NB GM	181 W
911401530045	BY698P G5 LED300/CW PSU WB GM	181 W
911401530145	BY698P G5 LED300/CW PSU NB GM	181 W
911401530245	BY698P G5 LED200/840 PSU WB CAU	121 W
911401530345	BY698P G5 LED250/840 PSU WB CAU	144 W
911401530445	BY698P G5 LED300/840 PSU WB CAU	181 W
911401530545	BY698P G5 LED200/840 PSU WB CAU CL	121 W
911401530645	BY698P G5 LED200/850 PSU WB CAU CL	121 W
911401530745	BY698P G5 LED250/840 PSU WB CAU CL	144 W
911401530845	BY698P G5 LED250/850 PSU WB CAU CL	144 W
911401530945	BY698P G5 LED300/840 PSU WB CAU CL	181 W
911401531045	BY698P G5 LED300/850 PSU WB CAU CL	181 W
911401531145	BY698P G5 LED105/NW PSD WB GC	69 W
911401531245	BY698P G5 LED105/NW PSD NB GC	69 W
911401531345	BY698P G5 LED105/CW PSD WB GC	69 W
911401531445	BY698P G5 LED105/CW PSD NB GC	69 W
911401531545	BY698P G5 LED150/NW PSD WB GC	93 W
911401531645	BY698P G5 LED150/NW PSD NB GC	93 W
911401531745	BY698P G5 LED150/CW PSD WB GC	93 W
911401531845	BY698P G5 LED150/CW PSD NB GC	93 W
911401531945	BY698P G5 LED200/NW PSD WB GC	126 W
911401532045	BY698P G5 LED200/NW PSD NB GC	126 W
911401532145	BY698P G5 LED200/CW PSD WB GC	126 W
911401532245	BY698P G5 LED200/CW PSD NB GC	126 W
911401532345	BY698P G5 LED250/NW PSD WB GC	154 W

Order Code	Full Product Name	Power Consumption
911401532445	BY698P G5 LED250/NW PSD NB GC	154 W
911401532545	BY698P G5 LED250/CW PSD WB GC	154 W
911401532645	BY698P G5 LED250/CW PSD NB GC	154 W
911401532745	BY698P G5 LED300/NW PSD WB GC	190 W
911401532845	BY698P G5 LED300/NW PSD NB GC	190 W
911401532945	BY698P G5 LED300/CW PSD WB GC	190 W
911401533045	BY698P G5 LED300/CW PSD NB GC	190 W
911401533145	BY698P G5 LED105/NW PSD WB GM	69 W
911401533245	BY698P G5 LED105/NW PSD NB GM	69 W
911401533345	BY698P G5 LED105/CW PSD WB GM	69 W
911401533445	BY698P G5 LED105/CW PSD NB GM	69 W
911401533545	BY698P G5 LED150/NW PSD WB GM	93 W
911401533645	BY698P G5 LED150/NW PSD NB GM	93 W
911401533745	BY698P G5 LED150/CW PSD WB GM	93 W
911401533845	BY698P G5 LED150/CW PSD NB GM	93 W
911401533945	BY698P G5 LED200/NW PSD WB GM	126 W
911401534045	BY698P G5 LED200/NW PSD NB GM	126 W
911401534145	BY698P G5 LED200/CW PSD WB GM	126 W
911401534245	BY698P G5 LED200/CW PSD NB GM	126 W
911401534345	BY698P G5 LED250/NW PSD WB GM	154 W
911401534445	BY698P G5 LED250/NW PSD NB GM	154 W
911401534545	BY698P G5 LED250/CW PSD WB GM	154 W
911401534645	BY698P G5 LED250/CW PSD NB GM	154 W
911401534745	BY698P G5 LED300/NW PSD WB GM	190 W
911401534845	BY698P G5 LED300/NW PSD NB GM	190 W
911401534945	BY698P G5 LED300/CW PSD WB GM	190 W
911401535045	BY698P G5 LED300/CW PSD NB GM	190 W
911401535145	BY698P G5 LED200/840 PSD WB CAU	126 W
911401535245	BY698P G5 LED250/840 PSD WB CAU	154 W
911401535445	BY698P G5 LED300/840 PSD WB CAU	190 W
911401535545	BY698P G5 LED105/NW PSU WB LA	63 W
911401535645	BY698P G5 LED105/CW PSU WB LA	63 W
911401535745	BY698P G5 LED150/NW PSU WB LA	88 W
911401535845	BY698P G5 LED150/CW PSU WB LA	88 W
911401535945	BY698P G5 LED200/NW PSU WB LA	121 W
911401536045	BY698P G5 LED200/NW PSU NB LA	121 W
911401536145	BY698P G5 LED200/CW PSU WB LA	121 W
911401536245	BY698P G5 LED200/CW PSU NB LA	121 W
911401536345	BY698P G5 LED250/NW PSU WB LA	144 W
911401536445	BY698P G5 LED250/NW PSU NB LA	144 W
911401536545	BY698P G5 LED250/CW PSU WB LA	144 W
911401536645	BY698P G5 LED250/CW PSU NB LA	144 W

Order Code	Full Product Name	Power Consumption
911401536745	BY698P G5 LED300/NW PSU WB LA	181 W
911401536845	BY698P G5 LED300/NW PSU NB LA	181 W
911401536945	BY698P G5 LED300/CW PSU WB LA	181 W
911401537045	BY698P G5 LED300/CW PSU NB LA	181 W
911401537145	BY698P G5 LED105/NW PSD WB LA	69 W
911401537245	BY698P G5 LED105/CW PSD WB LA	69 W
911401537345	BY698P G5 LED150/NW PSD WB LA	93 W
911401537445	BY698P G5 LED150/CW PSD WB LA	93 W
911401537545	BY698P G5 LED200/NW PSD WB LA	126 W
911401537645	BY698P G5 LED200/NW PSD NB LA	126 W
911401537745	BY698P G5 LED200/CW PSD WB LA	126 W
911401537845	BY698P G5 LED200/CW PSD NB LA	126 W
911401537945	BY698P G5 LED250/NW PSD WB LA	154 W
911401538045	BY698P G5 LED250/NW PSD NB LA	154 W
911401538145	BY698P G5 LED250/CW PSD WB LA	154 W
911401538245	BY698P G5 LED250/CW PSD NB LA	154 W
911401538345	BY698P G5 LED300/NW PSD WB LA	190 W
911401538445	BY698P G5 LED300/NW PSD NB LA	190 W
911401538545	BY698P G5 LED300/CW PSD WB LA	190 W
911401538645	BY698P G5 LED300/CW PSD NB LA	190 W
911401538745	BY698P G5 LED105/NW PSU WB GM L3m	63 W
911401538845	BY698P G5 LED105/NW PSU NB GM L3m	63 W
911401538945	BY698P G5 LED105/CW PSU WB GM L3m	63 W
911401539045	BY698P G5 LED105/CW PSU NB GM L3m	63 W
911401539145	BY698P G5 LED150/NW PSU WB GM L3m	88 W
911401539245	BY698P G5 LED150/NW PSU NB GM L3m	88 W
911401539345	BY698P G5 LED150/CW PSU WB GM L3m	88 W
911401539445	BY698P G5 LED150/CW PSU NB GM L3m	88 W
911401539545	BY698P G5 LED200/NW PSU WB GM L3m	121 W
911401539645	BY698P G5 LED200/NW PSU NB GM L3m	121 W
911401539745	BY698P G5 LED200/CW PSU WB GM L3m	121 W
911401539845	BY698P G5 LED200/CW PSU NB GM L3m	121 W
911401539945	BY698P G5 LED250/NW PSU WB GM L3m	144 W
911401540045	BY698P G5 LED250/NW PSU NB GM L3m	144 W
911401540145	BY698P G5 LED250/CW PSU WB GM L3m	144 W
911401540245	BY698P G5 LED250/CW PSU NB GM L3m	144 W
911401540345	BY698P G5 LED300/NW PSU WB GM L3m	181 W
911401540445	BY698P G5 LED300/NW PSU NB GM L3m	181 W
911401540545	BY698P G5 LED300/CW PSU WB GM L3m	181 W
911401540645	BY698P G5 LED300/CW PSU NB GM L3m	181 W
911401540745	BY690P LED105/NW PSU WB GC	63 W
911401540845	BY690P LED105/CW PSU WB GC	63 W

Order Code	Full Product Name	Power Consumption
911401540945	BY690P LED150/NW PSU WB GC	88 W
911401541045	BY690P LED150/CW PSU WB GC	88 W
911401541145	BY690P LED200/NW PSU WB GC	110 W
911401541245	BY690P LED200/CW PSU WB GC	110 W
911401541345	BY690P LED250/NW PSU WB GC	144 W
911401541445	BY690P LED250/CW PSU WB GC	144 W
911401541545	BY690P LED300/NW PSU WB GC	170 W
911401541645	BY690P LED300/CW PSU WB GC	170 W
911401541745	BY690P LED105/NW PSU WB GM	63 W
911401541845	BY690P LED105/CW PSU WB GM	63 W
911401541945	BY690P LED150/NW PSU WB GM	88 W
911401542045	BY690P LED150/CW PSU WB GM	88 W
911401542145	BY690P LED200/NW PSU WB GM	110 W
911401542245	BY690P LED200/CW PSU WB GM	110 W
911401542345	BY690P LED250/NW PSU WB GM	144 W
911401542445	BY690P LED250/CW PSU WB GM	144 W
911401542545	BY690P LED300/NW PSU WB GM	170 W
911401542645	BY690P LED300/CW PSU WB GM	170 W
911401580944	BY698P G5 LED105/NW PSU WB TW	63 W
911401581044	BY698P G5 LED105/NW PSU NB TW	63 W
911401581144	BY698P G5 LED105/CW PSU WB TW	63 W
911401581244	BY698P G5 LED105/CW PSU NB TW	63 W
911401581344	BY698P G5 LED150/NW PSU WB TW	88 W
911401581444	BY698P G5 LED150/NW PSU NB TW	88 W
911401581544	BY698P G5 LED150/CW PSU WB TW	88 W
911401581644	BY698P G5 LED150/CW PSU NB TW	88 W
911401581744	BY698P G5 LED200/NW PSU WB TW	121 W
911401581844	BY698P G5 LED200/NW PSU NB TW	121 W
911401581944	BY698P G5 LED200/CW PSU WB TW	121 W
911401582044	BY698P G5 LED200/CW PSU NB TW	121 W
911401582144	BY698P G5 LED250/NW PSU WB TW	144 W
911401582244	BY698P G5 LED250/NW PSU NB TW	144 W
911401582344	BY698P G5 LED250/CW PSU WB TW	144 W
911401582444	BY698P G5 LED250/CW PSU NB TW	144 W
911401582544	BY698P G5 LED300/NW PSU WB TW	181 W
911401582644	BY698P G5 LED300/NW PSU NB TW	181 W
911401582744	BY698P G5 LED300/CW PSU WB TW	181 W
911401582844	BY698P G5 LED300/CW PSU NB TW	181 W
911401543245	BY698X G5 LED150/NW Connected WB GC	86 W
911401543345	BY698X G5 LED150/CW Connected WB GC	86 W
911401543445	BY698X G5 LED200/NW Connected WB GC	122 W
911401543545	BY698X G5 LED200/CW Connected WB GC	122 W

Order Code	Full Product Name	Power Consumption
911401543645	BY698X G5 LED250/NW Connected WB GC	147 W
911401543745	BY698X G5 LED250/CW Connected WB GC	147 W
911401543845	BY698X G5 LED300/NW Connected WB GC	182 W
911401543945	BY698X G5 LED300/NW Connected NB GC	182 W
911401544045	BY698X G5 LED300/CW Connected WB GC	182 W
911401544145	BY698X G5 LED300/CW Connected NB GC	182 W
911401544245	BY698X G5 LED150/NW Connected WB GM	86 W
911401544345	BY698X G5 LED150/NW Connected NB GM	86 W
911401544445	BY698X G5 LED150/CW Connected WB GM	86 W
911401544545	BY698X G5 LED150/CW Connected NB GM	86 W
911401544645	BY698X G5 LED200/NW Connected WB GM	122 W
911401544745	BY698X G5 LED200/NW Connected NB GM	122 W
911401544845	BY698X G5 LED200/CW Connected WB GM	122 W
911401544945	BY698X G5 LED200/CW Connected NB GM	122 W
911401545045	BY698X G5 LED250/NW Connected WB GM	147 W
911401545145	BY698X G5 LED250/NW Connected NB GM	147 W
911401545245	BY698X G5 LED250/CW Connected WB GM	147 W
911401545345	BY698X G5 LED250/CW Connected NB GM	147 W
911401545445	BY698X G5 LED300/NW Connected WB GM	182 W
911401545545	BY698X G5 LED300/NW Connected NB GM	182 W
911401545645	BY698X G5 LED300/CW Connected WB GM	182 W
911401545745	BY698X G5 LED300/CW Connected NB GM	182 W
911401545845	BY698X G5 LED200/840 Connected WB CAU	122 W
911401545945	BY698X G5 LED250/840 Connected WB CAU	147 W
911401546045	BY698X G5 LED300/840 Connected WB CAU	182 W
911401546145	BY698X G5 LED150/NW Connected WB LA	86 W
911401546245	BY698X G5 LED150/CW Connected WB LA	86 W
911401546345	BY698X G5 LED200/NW Connected WB LA	122 W
911401546445	BY698X G5 LED200/NW Connected NB LA	122 W
911401546545	BY698X G5 LED200/CW Connected WB LA	122 W
911401546645	BY698X G5 LED200/CW Connected NB LA	122 W
911401546745	BY698X G5 LED250/NW Connected WB LA	147 W
911401546845	BY698X G5 LED250/NW Connected NB LA	147 W
911401546945	BY698X G5 LED250/CW Connected WB LA	147 W
911401547045	BY698X G5 LED250/CW Connected NB LA	147 W
911401547145	BY698X G5 LED300/NW Connected WB LA	182 W
911401547245	BY698X G5 LED300/NW Connected NB LA	182 W
911401547345	BY698X G5 LED300/CW Connected WB LA	182 W
911401547445	BY698X G5 LED300/CW Connected NB LA	182 W
911401547545	BY698X G5 LED105/NW L1W MW WB GM	63 W
911401547645	BY698X G5 LED105/CW L1W MW WB GM	63 W
911401547745	BY698X G5 LED150/NW L1W MW WB GM	88 W

Order Code	Full Product Name	Power Consumption
911401547845	BY698X G5 LED150/CW L1W MW WB GM	88 W
911401547945	BY698X G5 LED200/NW L1W MW WB GM	121 W
911401548045	BY698X G5 LED200/CW L1W MW WB GM	121 W
911401548145	BY698X G5 LED250/NW L1W MW WB GM	144 W
911401548245	BY698X G5 LED250/CW L1W MW WB GM	144 W
911401548345	BY698X G5 LED300/NW L1W MW WB GM	181 W
911401548445	BY698X G5 LED300/CW L1W MW WB GM	181 W
911401548545	BY698X G5 LED105/NW L1W MW WB GM L3m	63 W
911401548645	BY698X G5 LED105/CW L1W MW WB GM L3m	63 W
911401548745	BY698X G5 LED150/NW L1W MW WB GM L3m	88 W
911401548845	BY698X G5 LED150/CW L1W MW WB GM L3m	88 W
911401548945	BY698X G5 LED200/NW L1W MW WB GM L3m	121 W
911401549045	BY698X G5 LED200/CW L1W MW WB GM L3m	121 W
911401549145	BY698X G5 LED250/NW L1W MW WB GM L3m	144 W
911401549245	BY698X G5 LED250/CW L1W MW WB GM L3m	144 W
911401549345	BY698X G5 LED300/NW L1W MW WB GM L3m	181 W
911401549445	BY698X G5 LED300/CW L1W MW WB GM L3m	181 W

Controls and Dimming

Order Code	Full Product Name	Dimmable	Maximum dim level
911401549545	BY698X G5 LED105/NW L1W PIR WB GC	Wireless Dim - Do not use with dimmer	0% (digital)
911401549645	BY698X G5 LED105/CW L1W PIR WB GC	Wireless Dim - Do not use with dimmer	0% (digital)
911401549745	BY698X G5 LED150/NW L1W PIR WB GC	Wireless Dim - Do not use with dimmer	0% (digital)
911401549845	BY698X G5 LED150/CW L1W PIR WB GC	Wireless Dim - Do not use with dimmer	0% (digital)
911401549945	BY698X G5 LED200/NW L1W PIR WB GC	Wireless Dim - Do not use with dimmer	0% (digital)
911401550045	BY698X G5 LED200/CW L1W PIR WB GC	Wireless Dim - Do not use with dimmer	0% (digital)
911401550145	BY698X G5 LED250/NW L1W PIR WB GC	Wireless Dim - Do not use with dimmer	0% (digital)
911401550245	BY698X G5 LED250/CW L1W PIR WB GC	Wireless Dim - Do not use with dimmer	0% (digital)
911401550345	BY698X G5 LED300/NW L1W PIR WB GC	Wireless Dim - Do not use with dimmer	0% (digital)
911401550445	BY698X G5 LED300/CW L1W PIR WB GC	Wireless Dim - Do not use with dimmer	0% (digital)
911401550545	BY698X G5 LED105/NW L1W PIR WB GM	Wireless Dim - Do not use with dimmer	0% (digital)
911401550645	BY698X G5 LED105/CW L1W PIR WB GM	Wireless Dim - Do not use with dimmer	0% (digital)
911401550745	BY698X G5 LED150/NW L1W PIR WB GM	Wireless Dim - Do not use with dimmer	0% (digital)
911401550845	BY698X G5 LED150/CW L1W PIR WB GM	Wireless Dim - Do not use with dimmer	0% (digital)
911401550945	BY698X G5 LED200/NW L1W PIR WB GM	Wireless Dim - Do not use with dimmer	0% (digital)
911401551045	BY698X G5 LED200/CW L1W PIR WB GM	Wireless Dim - Do not use with dimmer	0% (digital)
911401551145	BY698X G5 LED250/NW L1W PIR WB GM	Wireless Dim - Do not use with dimmer	0% (digital)
911401551245	BY698X G5 LED250/CW L1W PIR WB GM	Wireless Dim - Do not use with dimmer	0% (digital)
911401551345	BY698X G5 LED300/NW L1W PIR WB GM	Wireless Dim - Do not use with dimmer	0% (digital)
911401551445	BY698X G5 LED300/CW L1W PIR WB GM	Wireless Dim - Do not use with dimmer	0% (digital)
911401551545	BY698X G5 LED105/840 L1W PIR WB CAU	Wireless Dim - Do not use with dimmer	0% (digital)

Order Code	Full Product Name	Dimmable	Maximum dim level
911401551645	BY698X G5 LED150/840 L1W PIR WB CAU	Wireless Dim - Do not use with dimmer	0% (digital)
911401551745	BY698X G5 LED200/840 L1W PIR WB CAU	Wireless Dim - Do not use with dimmer	0% (digital)
911401551845	BY698X G5 LED250/840 L1W PIR WB CAU	Wireless Dim - Do not use with dimmer	0% (digital)
911401551945	BY698X G5 LED300/840 L1W PIR WB CAU	Wireless Dim - Do not use with dimmer	0% (digital)
911401552045	BY698X G5 LED105/NW L1W PIR WB GM L3m	Wireless Dim - Do not use with dimmer	0% (digital)
911401552145	BY698X G5 LED105/CW L1W PIR WB GM L3m	Wireless Dim - Do not use with dimmer	0% (digital)
911401552245	BY698X G5 LED150/NW L1W PIR WB GM L3m	Wireless Dim - Do not use with dimmer	0% (digital)
911401552345	BY698X G5 LED150/CW L1W PIR WB GM L3m	Wireless Dim - Do not use with dimmer	0% (digital)
911401552445	BY698X G5 LED200/NW L1W PIR WB GM L3m	Wireless Dim - Do not use with dimmer	0% (digital)
911401552545	BY698X G5 LED200/CW L1W PIR WB GM L3m	Wireless Dim - Do not use with dimmer	0% (digital)
911401552645	BY698X G5 LED250/NW L1W PIR WB GM L3m	Wireless Dim - Do not use with dimmer	0% (digital)
911401552745	BY698X G5 LED250/CW L1W PIR WB GM L3m	Wireless Dim - Do not use with dimmer	0% (digital)
911401552845	BY698X G5 LED300/NW L1W PIR WB GM L3m	Wireless Dim - Do not use with dimmer	0% (digital)
911401552945	BY698X G5 LED300/CW L1W PIR WB GM L3m	Wireless Dim - Do not use with dimmer	0% (digital)
911401526245	BY698P G5 LED105/NW PSU WB GC	-	Not applicable
911401526345	BY698P G5 LED105/NW PSU NB GC	-	Not applicable
911401526445	BY698P G5 LED105/CW PSU WB GC	-	Not applicable
911401526545	BY698P G5 LED105/CW PSU NB GC	-	Not applicable
911401526645	BY698P G5 LED150/NW PSU WB GC	-	Not applicable
911401526745	BY698P G5 LED150/NW PSU NB GC	-	Not applicable
911401526845	BY698P G5 LED150/CW PSU WB GC	-	Not applicable
911401526945	BY698P G5 LED150/CW PSU NB GC	-	Not applicable
911401527045	BY698P G5 LED200/NW PSU WB GC	-	Not applicable
911401527145	BY698P G5 LED200/NW PSU NB GC	-	Not applicable
911401527245	BY698P G5 LED200/CW PSU WB GC	-	Not applicable
911401527345	BY698P G5 LED200/CW PSU NB GC	-	Not applicable
911401527445	BY698P G5 LED250/NW PSU WB GC	-	Not applicable
911401527545	BY698P G5 LED250/NW PSU NB GC	-	Not applicable
911401527645	BY698P G5 LED250/CW PSU WB GC	-	Not applicable
911401527745	BY698P G5 LED250/CW PSU NB GC	-	Not applicable
911401527845	BY698P G5 LED300/NW PSU WB GC	-	Not applicable
911401527945	BY698P G5 LED300/NW PSU NB GC	-	Not applicable
911401528045	BY698P G5 LED300/CW PSU WB GC	-	Not applicable
911401528145	BY698P G5 LED300/CW PSU NB GC	-	Not applicable
911401528245	BY698P G5 LED105/NW PSU WB GM	-	Not applicable
911401528345	BY698P G5 LED105/NW PSU NB GM	-	Not applicable
911401528445	BY698P G5 LED105/CW PSU WB GM	-	Not applicable
911401528545	BY698P G5 LED105/CW PSU NB GM	-	Not applicable
911401528645	BY698P G5 LED150/NW PSU WB GM	-	Not applicable
911401528745	BY698P G5 LED150/NW PSU NB GM	-	Not applicable
911401528845	BY698P G5 LED150/CW PSU WB GM	-	Not applicable
911401528945	BY698P G5 LED150/CW PSU NB GM	-	Not applicable

Order Code	Full Product Name	Dimmable	Maximum dim level
911401529045	BY698P G5 LED200/NW PSU WB GM	-	Not applicable
911401529145	BY698P G5 LED200/NW PSU NB GM	-	Not applicable
911401529245	BY698P G5 LED200/CW PSU WB GM	-	Not applicable
911401529345	BY698P G5 LED200/CW PSU NB GM	-	Not applicable
911401529445	BY698P G5 LED250/NW PSU WB GM	-	Not applicable
911401529545	BY698P G5 LED250/NW PSU NB GM	-	Not applicable
911401529645	BY698P G5 LED250/CW PSU WB GM	-	Not applicable
911401529745	BY698P G5 LED250/CW PSU NB GM	-	Not applicable
911401529845	BY698P G5 LED300/NW PSU WB GM	-	Not applicable
911401529945	BY698P G5 LED300/NW PSU NB GM	-	Not applicable
911401530045	BY698P G5 LED300/CW PSU WB GM	-	Not applicable
911401530145	BY698P G5 LED300/CW PSU NB GM	-	Not applicable
911401530245	BY698P G5 LED200/840 PSU WB CAU	-	Not applicable
911401530345	BY698P G5 LED250/840 PSU WB CAU	-	Not applicable
911401530445	BY698P G5 LED300/840 PSU WB CAU	-	Not applicable
911401530545	BY698P G5 LED200/840 PSU WB CAU CL	-	Not applicable
911401530645	BY698P G5 LED200/850 PSU WB CAU CL	-	Not applicable
911401530745	BY698P G5 LED250/840 PSU WB CAU CL	-	Not applicable
911401530845	BY698P G5 LED250/850 PSU WB CAU CL	-	Not applicable
911401530945	BY698P G5 LED300/840 PSU WB CAU CL	-	Not applicable
911401531045	BY698P G5 LED300/850 PSU WB CAU CL	-	Not applicable
911401531145	BY698P G5 LED105/NW PSD WB GC	DALI	20%
911401531245	BY698P G5 LED105/NW PSD NB GC	DALI	20%
911401531345	BY698P G5 LED105/CW PSD WB GC	DALI	20%
911401531445	BY698P G5 LED105/CW PSD NB GC	DALI	20%
911401531545	BY698P G5 LED150/NW PSD WB GC	DALI	20%
911401531645	BY698P G5 LED150/NW PSD NB GC	DALI	20%
911401531745	BY698P G5 LED150/CW PSD WB GC	DALI	20%
911401531845	BY698P G5 LED150/CW PSD NB GC	DALI	20%
911401531945	BY698P G5 LED200/NW PSD WB GC	DALI	10%
911401532045	BY698P G5 LED200/NW PSD NB GC	DALI	10%
911401532145	BY698P G5 LED200/CW PSD WB GC	DALI	10%
911401532245	BY698P G5 LED200/CW PSD NB GC	DALI	10%
911401532345	BY698P G5 LED250/NW PSD WB GC	DALI	20%
911401532445	BY698P G5 LED250/NW PSD NB GC	DALI	20%
911401532545	BY698P G5 LED250/CW PSD WB GC	DALI	20%
911401532645	BY698P G5 LED250/CW PSD NB GC	DALI	20%
911401532745	BY698P G5 LED300/NW PSD WB GC	DALI	20%
911401532845	BY698P G5 LED300/NW PSD NB GC	DALI	20%
911401532945	BY698P G5 LED300/CW PSD WB GC	DALI	20%
911401533045	BY698P G5 LED300/CW PSD NB GC	DALI	20%
911401533145	BY698P G5 LED105/NW PSD WB GM	DALI	20%

Order Code	Full Product Name	Dimmable	Maximum dim level
911401533245	BY698P G5 LED105/NW PSD NB GM	DALI	20%
911401533345	BY698P G5 LED105/CW PSD WB GM	DALI	20%
911401533445	BY698P G5 LED105/CW PSD NB GM	DALI	20%
911401533545	BY698P G5 LED150/NW PSD WB GM	DALI	20%
911401533645	BY698P G5 LED150/NW PSD NB GM	DALI	20%
911401533745	BY698P G5 LED150/CW PSD WB GM	DALI	20%
911401533845	BY698P G5 LED150/CW PSD NB GM	DALI	20%
911401533945	BY698P G5 LED200/NW PSD WB GM	DALI	10%
911401534045	BY698P G5 LED200/NW PSD NB GM	DALI	10%
911401534145	BY698P G5 LED200/CW PSD WB GM	DALI	10%
911401534245	BY698P G5 LED200/CW PSD NB GM	DALI	10%
911401534345	BY698P G5 LED250/NW PSD WB GM	DALI	20%
911401534445	BY698P G5 LED250/NW PSD NB GM	DALI	20%
911401534545	BY698P G5 LED250/CW PSD WB GM	DALI	20%
911401534645	BY698P G5 LED250/CW PSD NB GM	DALI	20%
911401534745	BY698P G5 LED300/NW PSD WB GM	DALI	20%
911401534845	BY698P G5 LED300/NW PSD NB GM	DALI	20%
911401534945	BY698P G5 LED300/CW PSD WB GM	DALI	20%
911401535045	BY698P G5 LED300/CW PSD NB GM	DALI	20%
911401535145	BY698P G5 LED200/840 PSD WB CAU	DALI	10%
911401535245	BY698P G5 LED250/840 PSD WB CAU	DALI	20%
911401535445	BY698P G5 LED300/840 PSD WB CAU	DALI	20%
911401535545	BY698P G5 LED105/NW PSU WB LA	-	Not applicable
911401535645	BY698P G5 LED105/CW PSU WB LA	-	Not applicable
911401535745	BY698P G5 LED150/NW PSU WB LA	-	Not applicable
911401535845	BY698P G5 LED150/CW PSU WB LA	-	Not applicable
911401535945	BY698P G5 LED200/NW PSU WB LA	-	Not applicable
911401536045	BY698P G5 LED200/NW PSU NB LA	-	Not applicable
911401536145	BY698P G5 LED200/CW PSU WB LA	-	Not applicable
911401536245	BY698P G5 LED200/CW PSU NB LA	-	Not applicable
911401536345	BY698P G5 LED250/NW PSU WB LA	-	Not applicable
911401536445	BY698P G5 LED250/NW PSU NB LA	-	Not applicable
911401536545	BY698P G5 LED250/CW PSU WB LA	-	Not applicable
911401536645	BY698P G5 LED250/CW PSU NB LA	-	Not applicable
911401536745	BY698P G5 LED300/NW PSU WB LA	-	Not applicable
911401536845	BY698P G5 LED300/NW PSU NB LA	-	Not applicable
911401536945	BY698P G5 LED300/CW PSU WB LA	-	Not applicable
911401537045	BY698P G5 LED300/CW PSU NB LA	-	Not applicable
911401537145	BY698P G5 LED105/NW PSD WB LA	DALI	20%
911401537245	BY698P G5 LED105/CW PSD WB LA	DALI	20%
911401537345	BY698P G5 LED150/NW PSD WB LA	DALI	20%
911401537445	BY698P G5 LED150/CW PSD WB LA	DALI	20%

Order Code	Full Product Name	Dimmable	Maximum dim level
911401537545	BY698P G5 LED200/NW PSD WB LA	DALI	10%
911401537645	BY698P G5 LED200/NW PSD NB LA	DALI	10%
911401537745	BY698P G5 LED200/CW PSD WB LA	DALI	10%
911401537845	BY698P G5 LED200/CW PSD NB LA	DALI	10%
911401537945	BY698P G5 LED250/NW PSD WB LA	DALI	20%
911401538045	BY698P G5 LED250/NW PSD NB LA	DALI	20%
911401538145	BY698P G5 LED250/CW PSD WB LA	DALI	20%
911401538245	BY698P G5 LED250/CW PSD NB LA	DALI	20%
911401538345	BY698P G5 LED300/NW PSD WB LA	DALI	20%
911401538445	BY698P G5 LED300/NW PSD NB LA	DALI	20%
911401538545	BY698P G5 LED300/CW PSD WB LA	DALI	20%
911401538645	BY698P G5 LED300/CW PSD NB LA	DALI	20%
911401538745	BY698P G5 LED105/NW PSU WB GM L3m	-	Not applicable
911401538845	BY698P G5 LED105/NW PSU NB GM L3m	-	Not applicable
911401538945	BY698P G5 LED105/CW PSU WB GM L3m	-	Not applicable
911401539045	BY698P G5 LED105/CW PSU NB GM L3m	-	Not applicable
911401539145	BY698P G5 LED150/NW PSU WB GM L3m	-	Not applicable
911401539245	BY698P G5 LED150/NW PSU NB GM L3m	-	Not applicable
911401539345	BY698P G5 LED150/CW PSU WB GM L3m	-	Not applicable
911401539445	BY698P G5 LED150/CW PSU NB GM L3m	-	Not applicable
911401539545	BY698P G5 LED200/NW PSU WB GM L3m	-	Not applicable
911401539645	BY698P G5 LED200/NW PSU NB GM L3m	-	Not applicable
911401539745	BY698P G5 LED200/CW PSU WB GM L3m	-	Not applicable
911401539845	BY698P G5 LED200/CW PSU NB GM L3m	-	Not applicable
911401539945	BY698P G5 LED250/NW PSU WB GM L3m	-	Not applicable
911401540045	BY698P G5 LED250/NW PSU NB GM L3m	-	Not applicable
911401540145	BY698P G5 LED250/CW PSU WB GM L3m	-	Not applicable
911401540245	BY698P G5 LED250/CW PSU NB GM L3m	-	Not applicable
911401540345	BY698P G5 LED300/NW PSU WB GM L3m	-	Not applicable
911401540445	BY698P G5 LED300/NW PSU NB GM L3m	-	Not applicable
911401540545	BY698P G5 LED300/CW PSU WB GM L3m	-	Not applicable
911401540645	BY698P G5 LED300/CW PSU NB GM L3m	-	Not applicable
911401540745	BY690P LED105/NW PSU WB GC	-	Not applicable
911401540845	BY690P LED105/CW PSU WB GC	-	Not applicable
911401540945	BY690P LED150/NW PSU WB GC	-	Not applicable
911401541045	BY690P LED150/CW PSU WB GC	-	Not applicable
911401541145	BY690P LED200/NW PSU WB GC	-	Not applicable
911401541245	BY690P LED200/CW PSU WB GC	-	Not applicable
911401541345	BY690P LED250/NW PSU WB GC	-	Not applicable
911401541445	BY690P LED250/CW PSU WB GC	-	Not applicable
911401541545	BY690P LED300/NW PSU WB GC	-	Not applicable
911401541645	BY690P LED300/CW PSU WB GC	-	Not applicable

Order Code	Full Product Name	Dimmable	Maximum dim level
911401541745	BY690P LED105/NW PSU WB GM	-	Not applicable
911401541845	BY690P LED105/CW PSU WB GM	-	Not applicable
911401541945	BY690P LED150/NW PSU WB GM	-	Not applicable
911401542045	BY690P LED150/CW PSU WB GM	-	Not applicable
911401542145	BY690P LED200/NW PSU WB GM	-	Not applicable
911401542245	BY690P LED200/CW PSU WB GM	-	Not applicable
911401542345	BY690P LED250/NW PSU WB GM	-	Not applicable
911401542445	BY690P LED250/CW PSU WB GM	-	Not applicable
911401542545	BY690P LED300/NW PSU WB GM	-	Not applicable
911401542645	BY690P LED300/CW PSU WB GM	-	Not applicable
911401580944	BY698P G5 LED105/NW PSU WB TW	-	Not applicable
911401581044	BY698P G5 LED105/NW PSU NB TW	-	Not applicable
911401581144	BY698P G5 LED105/CW PSU WB TW	-	Not applicable
911401581244	BY698P G5 LED105/CW PSU NB TW	-	Not applicable
911401581344	BY698P G5 LED150/NW PSU WB TW	-	Not applicable
911401581444	BY698P G5 LED150/NW PSU NB TW	-	Not applicable
911401581544	BY698P G5 LED150/CW PSU WB TW	-	Not applicable
911401581644	BY698P G5 LED150/CW PSU NB TW	-	Not applicable
911401581744	BY698P G5 LED200/NW PSU WB TW	-	Not applicable
911401581844	BY698P G5 LED200/NW PSU NB TW	-	Not applicable
911401581944	BY698P G5 LED200/CW PSU WB TW	-	Not applicable
911401582044	BY698P G5 LED200/CW PSU NB TW	-	Not applicable
911401582144	BY698P G5 LED250/NW PSU WB TW	-	Not applicable
911401582244	BY698P G5 LED250/NW PSU NB TW	-	Not applicable
911401582344	BY698P G5 LED250/CW PSU WB TW	-	Not applicable
911401582444	BY698P G5 LED250/CW PSU NB TW	-	Not applicable
911401582544	BY698P G5 LED300/NW PSU WB TW	-	Not applicable
911401582644	BY698P G5 LED300/NW PSU NB TW	-	Not applicable
911401582744	BY698P G5 LED300/CW PSU WB TW	-	Not applicable
911401582844	BY698P G5 LED300/CW PSU NB TW	-	Not applicable
911401543245	BY698X G5 LED150/NW Connected WB GC	-	3%
911401543345	BY698X G5 LED150/CW Connected WB GC	-	3%
911401543445	BY698X G5 LED200/NW Connected WB GC	-	1%
911401543545	BY698X G5 LED200/CW Connected WB GC	-	1%
911401543645	BY698X G5 LED250/NW Connected WB GC	-	3%
911401543745	BY698X G5 LED250/CW Connected WB GC	-	3%
911401543845	BY698X G5 LED300/NW Connected WB GC	-	3%
911401543945	BY698X G5 LED300/NW Connected NB GC	-	3%
911401544045	BY698X G5 LED300/CW Connected WB GC	-	3%
911401544145	BY698X G5 LED300/CW Connected NB GC	-	3%
911401544245	BY698X G5 LED150/NW Connected WB GM	-	3%
911401544345	BY698X G5 LED150/NW Connected NB GM	-	3%

Order Code	Full Product Name	Dimmable	Maximum dim level
911401544445	BY698X G5 LED150/CW Connected WB GM	-	3%
911401544545	BY698X G5 LED150/CW Connected NB GM	-	3%
911401544645	BY698X G5 LED200/NW Connected WB GM	-	1%
911401544745	BY698X G5 LED200/NW Connected NB GM	-	1%
911401544845	BY698X G5 LED200/CW Connected WB GM	-	1%
911401544945	BY698X G5 LED200/CW Connected NB GM	-	1%
911401545045	BY698X G5 LED250/NW Connected WB GM	-	3%
911401545145	BY698X G5 LED250/NW Connected NB GM	-	3%
911401545245	BY698X G5 LED250/CW Connected WB GM	-	3%
911401545345	BY698X G5 LED250/CW Connected NB GM	-	3%
911401545445	BY698X G5 LED300/NW Connected WB GM	-	3%
911401545545	BY698X G5 LED300/NW Connected NB GM	-	3%
911401545645	BY698X G5 LED300/CW Connected WB GM	-	3%
911401545745	BY698X G5 LED300/CW Connected NB GM	-	3%
911401545845	BY698X G5 LED200/840 Connected WB CAU	-	3%
911401545945	BY698X G5 LED250/840 Connected WB CAU	-	3%
911401546045	BY698X G5 LED300/840 Connected WB CAU	-	3%
911401546145	BY698X G5 LED150/NW Connected WB LA	-	3%
911401546245	BY698X G5 LED150/CW Connected WB LA	-	3%
911401546345	BY698X G5 LED200/NW Connected WB LA	-	1%
911401546445	BY698X G5 LED200/NW Connected NB LA	-	1%
911401546545	BY698X G5 LED200/CW Connected WB LA	-	1%
911401546645	BY698X G5 LED200/CW Connected NB LA	-	1%
911401546745	BY698X G5 LED250/NW Connected WB LA	-	3%
911401546845	BY698X G5 LED250/NW Connected NB LA	-	3%
911401546945	BY698X G5 LED250/CW Connected WB LA	-	3%
911401547045	BY698X G5 LED250/CW Connected NB LA	-	3%
911401547145	BY698X G5 LED300/NW Connected WB LA	-	3%
911401547245	BY698X G5 LED300/NW Connected NB LA	-	3%
911401547345	BY698X G5 LED300/CW Connected WB LA	-	3%
911401547445	BY698X G5 LED300/CW Connected NB LA	-	3%
911401547545	BY698X G5 LED105/NW L1W MW WB GM	Wireless Dim - Do not use with dimmer	0% (digital)
911401547645	BY698X G5 LED105/CW L1W MW WB GM	Wireless Dim - Do not use with dimmer	0% (digital)
911401547745	BY698X G5 LED150/NW L1W MW WB GM	Wireless Dim - Do not use with dimmer	0% (digital)
911401547845	BY698X G5 LED150/CW L1W MW WB GM	Wireless Dim - Do not use with dimmer	0% (digital)
911401547945	BY698X G5 LED200/NW L1W MW WB GM	Wireless Dim - Do not use with dimmer	0% (digital)
911401548045	BY698X G5 LED200/CW L1W MW WB GM	Wireless Dim - Do not use with dimmer	0% (digital)
911401548145	BY698X G5 LED250/NW L1W MW WB GM	Wireless Dim - Do not use with dimmer	0% (digital)
911401548245	BY698X G5 LED250/CW L1W MW WB GM	Wireless Dim - Do not use with dimmer	0% (digital)
911401548345	BY698X G5 LED300/NW L1W MW WB GM	Wireless Dim - Do not use with dimmer	0% (digital)
911401548445	BY698X G5 LED300/CW L1W MW WB GM	Wireless Dim - Do not use with dimmer	0% (digital)
911401548545	BY698X G5 LED105/NW L1W MW WB GM L3m	Wireless Dim - Do not use with dimmer	0% (digital)

Order Code	Full Product Name	Dimmable	Maximum dim level
911401548645	BY698X G5 LED105/CW L1W MW WB GM L3m	Wireless Dim - Do not use with dimmer	0% (digital)
911401548745	BY698X G5 LED150/NW L1W MW WB GM L3m	Wireless Dim - Do not use with dimmer	0% (digital)
911401548845	BY698X G5 LED150/CW L1W MW WB GM L3m	Wireless Dim - Do not use with dimmer	0% (digital)
911401548945	BY698X G5 LED200/NW L1W MW WB GM L3m	Wireless Dim - Do not use with dimmer	0% (digital)
911401549045	BY698X G5 LED200/CW L1W MW WB GM L3m	Wireless Dim - Do not use with dimmer	0% (digital)
911401549145	BY698X G5 LED250/NW L1W MW WB GM L3m	Wireless Dim - Do not use with dimmer	0% (digital)
911401549245	BY698X G5 LED250/CW L1W MW WB GM L3m	Wireless Dim - Do not use with dimmer	0% (digital)
911401549345	BY698X G5 LED300/NW L1W MW WB GM L3m	Wireless Dim - Do not use with dimmer	0% (digital)
911401549445	BY698X G5 LED300/CW L1W MW WB GM L3m	Wireless Dim - Do not use with dimmer	0% (digital)

Mechanical and Housing

Order Code	Full Product Name	Ingress protection code	Mech. impact protection code
911401549545	BY698X G5 LED105/NW L1W PIR WB GC	IP65	IK03
911401549645	BY698X G5 LED105/CW L1W PIR WB GC	IP65	IK03
911401549745	BY698X G5 LED150/NW L1W PIR WB GC	IP65	IK03
911401549845	BY698X G5 LED150/CW L1W PIR WB GC	IP65	IK03
911401549945	BY698X G5 LED200/NW L1W PIR WB GC	IP65	IK03
911401550045	BY698X G5 LED200/CW L1W PIR WB GC	IP65	IK03
911401550145	BY698X G5 LED250/NW L1W PIR WB GC	IP65	IK03
911401550245	BY698X G5 LED250/CW L1W PIR WB GC	IP65	IK03
911401550345	BY698X G5 LED300/NW L1W PIR WB GC	IP65	IK03
911401550445	BY698X G5 LED300/CW L1W PIR WB GC	IP65	IK03
911401550545	BY698X G5 LED105/NW L1W PIR WB GM	IP65	IK03
911401550645	BY698X G5 LED105/CW L1W PIR WB GM	IP65	IK03
911401550745	BY698X G5 LED150/NW L1W PIR WB GM	IP65	IK03
911401550845	BY698X G5 LED150/CW L1W PIR WB GM	IP65	IK03
911401550945	BY698X G5 LED200/NW L1W PIR WB GM	IP65	IK03
911401551045	BY698X G5 LED200/CW L1W PIR WB GM	IP65	IK03
911401551145	BY698X G5 LED250/NW L1W PIR WB GM	IP65	IK03
911401551245	BY698X G5 LED250/CW L1W PIR WB GM	IP65	IK03
911401551345	BY698X G5 LED300/NW L1W PIR WB GM	IP65	IK03
911401551445	BY698X G5 LED300/CW L1W PIR WB GM	IP65	IK03
911401551545	BY698X G5 LED105/840 L1W PIR WB CAU	IP65	IK03
911401551645	BY698X G5 LED150/840 L1W PIR WB CAU	IP65	IK03
911401551745	BY698X G5 LED200/840 L1W PIR WB CAU	IP65	IK03
911401551845	BY698X G5 LED250/840 L1W PIR WB CAU	IP65	IK03
911401551945	BY698X G5 LED300/840 L1W PIR WB CAU	IP65	IK03
911401552045	BY698X G5 LED105/NW L1W PIR WB GM L3m	IP65	IK03
911401552145	BY698X G5 LED105/CW L1W PIR WB GM L3m	IP65	IK03
911401552245	BY698X G5 LED150/NW L1W PIR WB GM L3m	IP65	IK03
911401552345	BY698X G5 LED150/CW L1W PIR WB GM L3m	IP65	IK03

Order Code	Full Product Name	Ingress protection code	Mech. impact protection code
911401552445	BY698X G5 LED200/NW L1W PIR WB GM L3m	IP65	IK03
911401552545	BY698X G5 LED200/CW L1W PIR WB GM L3m	IP65	IK03
911401552645	BY698X G5 LED250/NW L1W PIR WB GM L3m	IP65	IK03
911401552745	BY698X G5 LED250/CW L1W PIR WB GM L3m	IP65	IK03
911401552845	BY698X G5 LED300/NW L1W PIR WB GM L3m	IP65	IK03
911401552945	BY698X G5 LED300/CW L1W PIR WB GM L3m	IP65	IK03
911401526245	BY698P G5 LED105/NW PSU WB GC	IP65	IK08
911401526345	BY698P G5 LED105/NW PSU NB GC	IP65	IK08
911401526445	BY698P G5 LED105/CW PSU WB GC	IP65	IK08
911401526545	BY698P G5 LED105/CW PSU NB GC	IP65	IK08
911401526645	BY698P G5 LED150/NW PSU WB GC	IP65	IK08
911401526745	BY698P G5 LED150/NW PSU NB GC	IP65	IK08
911401526845	BY698P G5 LED150/CW PSU WB GC	IP65	IK08
911401526945	BY698P G5 LED150/CW PSU NB GC	IP65	IK08
911401527045	BY698P G5 LED200/NW PSU WB GC	IP65	IK08
911401527145	BY698P G5 LED200/NW PSU NB GC	IP65	IK08
911401527245	BY698P G5 LED200/CW PSU WB GC	IP65	IK08
911401527345	BY698P G5 LED200/CW PSU NB GC	IP65	IK08
911401527445	BY698P G5 LED250/NW PSU WB GC	IP65	IK08
911401527545	BY698P G5 LED250/NW PSU NB GC	IP65	IK08
911401527645	BY698P G5 LED250/CW PSU WB GC	IP65	IK08
911401527745	BY698P G5 LED250/CW PSU NB GC	IP65	IK08
911401527845	BY698P G5 LED300/NW PSU WB GC	IP65	IK08
911401527945	BY698P G5 LED300/NW PSU NB GC	IP65	IK08
911401528045	BY698P G5 LED300/CW PSU WB GC	IP65	IK08
911401528145	BY698P G5 LED300/CW PSU NB GC	IP65	IK08
911401528245	BY698P G5 LED105/NW PSU WB GM	IP65	IK08
911401528345	BY698P G5 LED105/NW PSU NB GM	IP65	IK08
911401528445	BY698P G5 LED105/CW PSU WB GM	IP65	IK08
911401528545	BY698P G5 LED105/CW PSU NB GM	IP65	IK08
911401528645	BY698P G5 LED150/NW PSU WB GM	IP65	IK08
911401528745	BY698P G5 LED150/NW PSU NB GM	IP65	IK08
911401528845	BY698P G5 LED150/CW PSU WB GM	IP65	IK08
911401528945	BY698P G5 LED150/CW PSU NB GM	IP65	IK08
911401529045	BY698P G5 LED200/NW PSU WB GM	IP65	IK08
911401529145	BY698P G5 LED200/NW PSU NB GM	IP65	IK08
911401529245	BY698P G5 LED200/CW PSU WB GM	IP65	IK08
911401529345	BY698P G5 LED200/CW PSU NB GM	IP65	IK08
911401529445	BY698P G5 LED250/NW PSU WB GM	IP65	IK08
911401529545	BY698P G5 LED250/NW PSU NB GM	IP65	IK08
911401529645	BY698P G5 LED250/CW PSU WB GM	IP65	IK08
911401529745	BY698P G5 LED250/CW PSU NB GM	IP65	IK08

Order Code	Full Product Name	Ingress protection code	Mech. impact protection code
911401529845	BY698P G5 LED300/NW PSU WB GM	IP65	IK08
911401529945	BY698P G5 LED300/NW PSU NB GM	IP65	IK08
911401530045	BY698P G5 LED300/CW PSU WB GM	IP65	IK08
911401530145	BY698P G5 LED300/CW PSU NB GM	IP65	IK08
911401530245	BY698P G5 LED200/840 PSU WB CAU	IP65	IK08
911401530345	BY698P G5 LED250/840 PSU WB CAU	IP65	IK08
911401530445	BY698P G5 LED300/840 PSU WB CAU	IP65	IK08
911401530545	BY698P G5 LED200/840 PSU WB CAU CL	IP65	IK08
911401530645	BY698P G5 LED200/850 PSU WB CAU CL	IP65	IK08
911401530745	BY698P G5 LED250/840 PSU WB CAU CL	IP65	IK08
911401530845	BY698P G5 LED250/850 PSU WB CAU CL	IP65	IK08
911401530945	BY698P G5 LED300/840 PSU WB CAU CL	IP65	IK08
911401531045	BY698P G5 LED300/850 PSU WB CAU CL	IP65	IK08
911401531145	BY698P G5 LED105/NW PSD WB GC	IP65	IK08
911401531245	BY698P G5 LED105/NW PSD NB GC	IP65	IK08
911401531345	BY698P G5 LED105/CW PSD WB GC	IP65	IK08
911401531445	BY698P G5 LED105/CW PSD NB GC	IP65	IK08
911401531545	BY698P G5 LED150/NW PSD WB GC	IP65	IK08
911401531645	BY698P G5 LED150/NW PSD NB GC	IP65	IK08
911401531745	BY698P G5 LED150/CW PSD WB GC	IP65	IK08
911401531845	BY698P G5 LED150/CW PSD NB GC	IP65	IK08
911401531945	BY698P G5 LED200/NW PSD WB GC	IP65	IK08
911401532045	BY698P G5 LED200/NW PSD NB GC	IP65	IK08
911401532145	BY698P G5 LED200/CW PSD WB GC	IP65	IK08
911401532245	BY698P G5 LED200/CW PSD NB GC	IP65	IK08
911401532345	BY698P G5 LED250/NW PSD WB GC	IP65	IK08
911401532445	BY698P G5 LED250/NW PSD NB GC	IP65	IK08
911401532545	BY698P G5 LED250/CW PSD WB GC	IP65	IK08
911401532645	BY698P G5 LED250/CW PSD NB GC	IP65	IK08
911401532745	BY698P G5 LED300/NW PSD WB GC	IP65	IK08
911401532845	BY698P G5 LED300/NW PSD NB GC	IP65	IK08
911401532945	BY698P G5 LED300/CW PSD WB GC	IP65	IK08
911401533045	BY698P G5 LED300/CW PSD NB GC	IP65	IK08
911401533145	BY698P G5 LED105/NW PSD WB GM	IP65	IK08
911401533245	BY698P G5 LED105/NW PSD NB GM	IP65	IK08
911401533345	BY698P G5 LED105/CW PSD WB GM	IP65	IK08
911401533445	BY698P G5 LED105/CW PSD NB GM	IP65	IK08
911401533545	BY698P G5 LED150/NW PSD WB GM	IP65	IK08
911401533645	BY698P G5 LED150/NW PSD NB GM	IP65	IK08
911401533745	BY698P G5 LED150/CW PSD WB GM	IP65	IK08
911401533845	BY698P G5 LED150/CW PSD NB GM	IP65	IK08
911401533945	BY698P G5 LED200/NW PSD WB GM	IP65	IK08

Order Code	Full Product Name	Ingress protection code	Mech. impact protection code
911401534045	BY698P G5 LED200/NW PSD NB GM	IP65	IK08
911401534145	BY698P G5 LED200/CW PSD WB GM	IP65	IK08
911401534245	BY698P G5 LED200/CW PSD NB GM	IP65	IK08
911401534345	BY698P G5 LED250/NW PSD WB GM	IP65	IK08
911401534445	BY698P G5 LED250/NW PSD NB GM	IP65	IK08
911401534545	BY698P G5 LED250/CW PSD WB GM	IP65	IK08
911401534645	BY698P G5 LED250/CW PSD NB GM	IP65	IK08
911401534745	BY698P G5 LED300/NW PSD WB GM	IP65	IK08
911401534845	BY698P G5 LED300/NW PSD NB GM	IP65	IK08
911401534945	BY698P G5 LED300/CW PSD WB GM	IP65	IK08
911401535045	BY698P G5 LED300/CW PSD NB GM	IP65	IK08
911401535145	BY698P G5 LED200/840 PSD WB CAU	IP65	IK08
911401535245	BY698P G5 LED250/840 PSD WB CAU	IP65	IK08
911401535445	BY698P G5 LED300/840 PSD WB CAU	IP65	IK08
911401535545	BY698P G5 LED105/NW PSU WB LA	IP65	IK08
911401535645	BY698P G5 LED105/CW PSU WB LA	IP65	IK08
911401535745	BY698P G5 LED150/NW PSU WB LA	IP65	IK08
911401535845	BY698P G5 LED150/CW PSU WB LA	IP65	IK08
911401535945	BY698P G5 LED200/NW PSU WB LA	IP65	IK08
911401536045	BY698P G5 LED200/NW PSU NB LA	IP65	IK08
911401536145	BY698P G5 LED200/CW PSU WB LA	IP65	IK08
911401536245	BY698P G5 LED200/CW PSU NB LA	IP65	IK08
911401536345	BY698P G5 LED250/NW PSU WB LA	IP65	IK08
911401536445	BY698P G5 LED250/NW PSU NB LA	IP65	IK08
911401536545	BY698P G5 LED250/CW PSU WB LA	IP65	IK08
911401536645	BY698P G5 LED250/CW PSU NB LA	IP65	IK08
911401536745	BY698P G5 LED300/NW PSU WB LA	IP65	IK08
911401536845	BY698P G5 LED300/NW PSU NB LA	IP65	IK08
911401536945	BY698P G5 LED300/CW PSU WB LA	IP65	IK08
911401537045	BY698P G5 LED300/CW PSU NB LA	IP65	IK08
911401537145	BY698P G5 LED105/NW PSD WB LA	IP65	IK08
911401537245	BY698P G5 LED105/CW PSD WB LA	IP65	IK08
911401537345	BY698P G5 LED150/NW PSD WB LA	IP65	IK08
911401537445	BY698P G5 LED150/CW PSD WB LA	IP65	IK08
911401537545	BY698P G5 LED200/NW PSD WB LA	IP65	IK08
911401537645	BY698P G5 LED200/NW PSD NB LA	IP65	IK08
911401537745	BY698P G5 LED200/CW PSD WB LA	IP65	IK08
911401537845	BY698P G5 LED200/CW PSD NB LA	IP65	IK08
911401537945	BY698P G5 LED250/NW PSD WB LA	IP65	IK08
911401538045	BY698P G5 LED250/NW PSD NB LA	IP65	IK08
911401538145	BY698P G5 LED250/CW PSD WB LA	IP65	IK08
911401538245	BY698P G5 LED250/CW PSD NB LA	IP65	IK08

Order Code	Full Product Name	Ingress protection code	Mech. impact protection code
911401538345	BY698P G5 LED300/NW PSD WB LA	IP65	IK08
911401538445	BY698P G5 LED300/NW PSD NB LA	IP65	IK08
911401538545	BY698P G5 LED300/CW PSD WB LA	IP65	IK08
911401538645	BY698P G5 LED300/CW PSD NB LA	IP65	IK08
911401538745	BY698P G5 LED105/NW PSU WB GM L3m	IP65	IK08
911401538845	BY698P G5 LED105/NW PSU NB GM L3m	IP65	IK08
911401538945	BY698P G5 LED105/CW PSU WB GM L3m	IP65	IK08
911401539045	BY698P G5 LED105/CW PSU NB GM L3m	IP65	IK08
911401539145	BY698P G5 LED150/NW PSU WB GM L3m	IP65	IK08
911401539245	BY698P G5 LED150/NW PSU NB GM L3m	IP65	IK08
911401539345	BY698P G5 LED150/CW PSU WB GM L3m	IP65	IK08
911401539445	BY698P G5 LED150/CW PSU NB GM L3m	IP65	IK08
911401539545	BY698P G5 LED200/NW PSU WB GM L3m	IP65	IK08
911401539645	BY698P G5 LED200/NW PSU NB GM L3m	IP65	IK08
911401539745	BY698P G5 LED200/CW PSU WB GM L3m	IP65	IK08
911401539845	BY698P G5 LED200/CW PSU NB GM L3m	IP65	IK08
911401539945	BY698P G5 LED250/NW PSU WB GM L3m	IP65	IK08
911401540045	BY698P G5 LED250/NW PSU NB GM L3m	IP65	IK08
911401540145	BY698P G5 LED250/CW PSU WB GM L3m	IP65	IK08
911401540245	BY698P G5 LED250/CW PSU NB GM L3m	IP65	IK08
911401540345	BY698P G5 LED300/NW PSU WB GM L3m	IP65	IK08
911401540445	BY698P G5 LED300/NW PSU NB GM L3m	IP65	IK08
911401540545	BY698P G5 LED300/CW PSU WB GM L3m	IP65	IK08
911401540645	BY698P G5 LED300/CW PSU NB GM L3m	IP65	IK08
911401540745	BY690P LED105/NW PSU WB GC	IP66	IK08
911401540845	BY690P LED105/CW PSU WB GC	IP66	IK08
911401540945	BY690P LED150/NW PSU WB GC	IP66	IK08
911401541045	BY690P LED150/CW PSU WB GC	IP66	IK08
911401541145	BY690P LED200/NW PSU WB GC	IP66	IK08
911401541245	BY690P LED200/CW PSU WB GC	IP66	IK08
911401541345	BY690P LED250/NW PSU WB GC	IP66	IK08
911401541445	BY690P LED250/CW PSU WB GC	IP66	IK08
911401541545	BY690P LED300/NW PSU WB GC	IP66	IK08
911401541645	BY690P LED300/CW PSU WB GC	IP66	IK08
911401541745	BY690P LED105/NW PSU WB GM	IP66	IK08
911401541845	BY690P LED105/CW PSU WB GM	IP66	IK08
911401541945	BY690P LED150/NW PSU WB GM	IP66	IK08
911401542045	BY690P LED150/CW PSU WB GM	IP66	IK08
911401542145	BY690P LED200/NW PSU WB GM	IP66	IK08
911401542245	BY690P LED200/CW PSU WB GM	IP66	IK08
911401542345	BY690P LED250/NW PSU WB GM	IP66	IK08
911401542445	BY690P LED250/CW PSU WB GM	IP66	IK08

Order Code	Full Product Name	Ingress protection code	Mech. impact protection code
911401542545	BY690P LED300/NW PSU WB GM	IP66	IK08
911401542645	BY690P LED300/CW PSU WB GM	IP66	IK08
911401580944	BY698P G5 LED105/NW PSU WB TW	IP65	IK08
911401581044	BY698P G5 LED105/NW PSU NB TW	IP65	IK08
911401581144	BY698P G5 LED105/CW PSU WB TW	IP65	IK08
911401581244	BY698P G5 LED105/CW PSU NB TW	IP65	IK08
911401581344	BY698P G5 LED150/NW PSU WB TW	IP65	IK08
911401581444	BY698P G5 LED150/NW PSU NB TW	IP65	IK08
911401581544	BY698P G5 LED150/CW PSU WB TW	IP65	IK08
911401581644	BY698P G5 LED150/CW PSU NB TW	IP65	IK08
911401581744	BY698P G5 LED200/NW PSU WB TW	IP65	IK08
911401581844	BY698P G5 LED200/NW PSU NB TW	IP65	IK08
911401581944	BY698P G5 LED200/CW PSU WB TW	IP65	IK08
911401582044	BY698P G5 LED200/CW PSU NB TW	IP65	IK08
911401582144	BY698P G5 LED250/NW PSU WB TW	IP65	IK08
911401582244	BY698P G5 LED250/NW PSU NB TW	IP65	IK08
911401582344	BY698P G5 LED250/CW PSU WB TW	IP65	IK08
911401582444	BY698P G5 LED250/CW PSU NB TW	IP65	IK08
911401582544	BY698P G5 LED300/NW PSU WB TW	IP65	IK08
911401582644	BY698P G5 LED300/NW PSU NB TW	IP65	IK08
911401582744	BY698P G5 LED300/CW PSU WB TW	IP65	IK08
911401582844	BY698P G5 LED300/CW PSU NB TW	IP65	IK08
911401543245	BY698X G5 LED150/NW Connected WB GC	IP65	IK05
911401543345	BY698X G5 LED150/CW Connected WB GC	IP65	IK05
911401543445	BY698X G5 LED200/NW Connected WB GC	IP65	IK05
911401543545	BY698X G5 LED200/CW Connected WB GC	IP65	IK05
911401543645	BY698X G5 LED250/NW Connected WB GC	IP65	IK05
911401543745	BY698X G5 LED250/CW Connected WB GC	IP65	IK05
911401543845	BY698X G5 LED300/NW Connected WB GC	IP65	IK05
911401543945	BY698X G5 LED300/NW Connected NB GC	IP65	IK05
911401544045	BY698X G5 LED300/CW Connected WB GC	IP65	IK05
911401544145	BY698X G5 LED300/CW Connected NB GC	IP65	IK05
911401544245	BY698X G5 LED150/NW Connected WB GM	IP65	IK05
911401544345	BY698X G5 LED150/NW Connected NB GM	IP65	IK05
911401544445	BY698X G5 LED150/CW Connected WB GM	IP65	IK05
911401544545	BY698X G5 LED150/CW Connected NB GM	IP65	IK05
911401544645	BY698X G5 LED200/NW Connected WB GM	IP65	IK05
911401544745	BY698X G5 LED200/NW Connected NB GM	IP65	IK05
911401544845	BY698X G5 LED200/CW Connected WB GM	IP65	IK05
911401544945	BY698X G5 LED200/CW Connected NB GM	IP65	IK05
911401545045	BY698X G5 LED250/NW Connected WB GM	IP65	IK05
911401545145	BY698X G5 LED250/NW Connected NB GM	IP65	IK05

Order Code	Full Product Name	Ingress protection code	Mech. impact protection code
911401545245	BY698X G5 LED250/CW Connected WB GM	IP65	IK05
911401545345	BY698X G5 LED250/CW Connected NB GM	IP65	IK05
911401545445	BY698X G5 LED300/NW Connected WB GM	IP65	IK05
911401545545	BY698X G5 LED300/NW Connected NB GM	IP65	IK05
911401545645	BY698X G5 LED300/CW Connected WB GM	IP65	IK05
911401545745	BY698X G5 LED300/CW Connected NB GM	IP65	IK05
911401545845	BY698X G5 LED200/840 Connected WB CAU	IP65	IK05
911401545945	BY698X G5 LED250/840 Connected WB CAU	IP65	IK05
911401546045	BY698X G5 LED300/840 Connected WB CAU	IP65	IK05
911401546145	BY698X G5 LED150/NW Connected WB LA	IP65	IK05
911401546245	BY698X G5 LED150/CW Connected WB LA	IP65	IK05
911401546345	BY698X G5 LED200/NW Connected WB LA	IP65	IK05
911401546445	BY698X G5 LED200/NW Connected NB LA	IP65	IK05
911401546545	BY698X G5 LED200/CW Connected WB LA	IP65	IK05
911401546645	BY698X G5 LED200/CW Connected NB LA	IP65	IK05
911401546745	BY698X G5 LED250/NW Connected WB LA	IP65	IK05
911401546845	BY698X G5 LED250/NW Connected NB LA	IP65	IK05
911401546945	BY698X G5 LED250/CW Connected WB LA	IP65	IK05
911401547045	BY698X G5 LED250/CW Connected NB LA	IP65	IK05
911401547145	BY698X G5 LED300/NW Connected WB LA	IP65	IK05
911401547245	BY698X G5 LED300/NW Connected NB LA	IP65	IK05
911401547345	BY698X G5 LED300/CW Connected WB LA	IP65	IK05
911401547445	BY698X G5 LED300/CW Connected NB LA	IP65	IK05
911401547545	BY698X G5 LED105/NW L1W MW WB GM	IP65	IK06
911401547645	BY698X G5 LED105/CW L1W MW WB GM	IP65	IK06
911401547745	BY698X G5 LED150/NW L1W MW WB GM	IP65	IK06
911401547845	BY698X G5 LED150/CW L1W MW WB GM	IP65	IK06
911401547945	BY698X G5 LED200/NW L1W MW WB GM	IP65	IK06
911401548045	BY698X G5 LED200/CW L1W MW WB GM	IP65	IK06
911401548145	BY698X G5 LED250/NW L1W MW WB GM	IP65	IK06
911401548245	BY698X G5 LED250/CW L1W MW WB GM	IP65	IK06
911401548345	BY698X G5 LED300/NW L1W MW WB GM	IP65	IK06
911401548445	BY698X G5 LED300/CW L1W MW WB GM	IP65	IK06
911401548545	BY698X G5 LED105/NW L1W MW WB GM L3m	IP65	IK06
911401548645	BY698X G5 LED105/CW L1W MW WB GM L3m	IP65	IK06
911401548745	BY698X G5 LED150/NW L1W MW WB GM L3m	IP65	IK06
911401548845	BY698X G5 LED150/CW L1W MW WB GM L3m	IP65	IK06
911401548945	BY698X G5 LED200/NW L1W MW WB GM L3m	IP65	IK06
911401549045	BY698X G5 LED200/CW L1W MW WB GM L3m	IP65	IK06
911401549145	BY698X G5 LED250/NW L1W MW WB GM L3m	IP65	IK06
911401549245	BY698X G5 LED250/CW L1W MW WB GM L3m	IP65	IK06
911401549345	BY698X G5 LED300/NW L1W MW WB GM L3m	IP65	IK06
911401549445	BY698X G5 LED300/CW L1W MW WB GM L3m	IP65	IK06

Approval and Application

Order Code	Full Product Name	Glow-wire test	Ambient temperature range
911401549545	BY698X G5 LED105/NW L1W PIR WB GC	Temperature 750 °C, duration 30 s	-30 to +50 °C
911401549645	BY698X G5 LED105/CW L1W PIR WB GC	Temperature 750 °C, duration 30 s	-30 to +50 °C
911401549745	BY698X G5 LED150/NW L1W PIR WB GC	Temperature 750 °C, duration 30 s	-30 to +50 °C
911401549845	BY698X G5 LED150/CW L1W PIR WB GC	Temperature 750 °C, duration 30 s	-30 to +50 °C
911401549945	BY698X G5 LED200/NW L1W PIR WB GC	Temperature 750 °C, duration 30 s	-30 to +50 °C
911401550045	BY698X G5 LED200/CW L1W PIR WB GC	Temperature 750 °C, duration 30 s	-30 to +50 °C
911401550145	BY698X G5 LED250/NW L1W PIR WB GC	Temperature 750 °C, duration 30 s	-30 to +50 °C
911401550245	BY698X G5 LED250/CW L1W PIR WB GC	Temperature 750 °C, duration 30 s	-30 to +50 °C
911401550345	BY698X G5 LED300/NW L1W PIR WB GC	Temperature 750 °C, duration 30 s	-30 to +50 °C
911401550445	BY698X G5 LED300/CW L1W PIR WB GC	Temperature 750 °C, duration 30 s	-30 to +50 °C
911401550545	BY698X G5 LED105/NW L1W PIR WB GM	Temperature 750 °C, duration 30 s	-30 to +50 °C
911401550645	BY698X G5 LED105/CW L1W PIR WB GM	Temperature 750 °C, duration 30 s	-30 to +50 °C
911401550745	BY698X G5 LED150/NW L1W PIR WB GM	Temperature 750 °C, duration 30 s	-30 to +50 °C
911401550845	BY698X G5 LED150/CW L1W PIR WB GM	Temperature 750 °C, duration 30 s	-30 to +50 °C
911401550945	BY698X G5 LED200/NW L1W PIR WB GM	Temperature 750 °C, duration 30 s	-30 to +50 °C
911401551045	BY698X G5 LED200/CW L1W PIR WB GM	Temperature 750 °C, duration 30 s	-30 to +50 °C
911401551145	BY698X G5 LED250/NW L1W PIR WB GM	Temperature 750 °C, duration 30 s	-30 to +50 °C
911401551245	BY698X G5 LED250/CW L1W PIR WB GM	Temperature 750 °C, duration 30 s	-30 to +50 °C
911401551345	BY698X G5 LED300/NW L1W PIR WB GM	Temperature 750 °C, duration 30 s	-30 to +50 °C
911401551445	BY698X G5 LED300/CW L1W PIR WB GM	Temperature 750 °C, duration 30 s	-30 to +50 °C
911401551545	BY698X G5 LED105/840 L1W PIR WB CAU	Temperature 750 °C, duration 30 s	-30 to +50 °C
911401551645	BY698X G5 LED150/840 L1W PIR WB CAU	Temperature 750 °C, duration 30 s	-30 to +50 °C
911401551745	BY698X G5 LED200/840 L1W PIR WB CAU	Temperature 750 °C, duration 30 s	-30 to +50 °C
911401551845	BY698X G5 LED250/840 L1W PIR WB CAU	Temperature 750 °C, duration 30 s	-30 to +50 °C
911401551945	BY698X G5 LED300/840 L1W PIR WB CAU	Temperature 750 °C, duration 30 s	-30 to +50 °C
911401552045	BY698X G5 LED105/NW L1W PIR WB GM L3m	Temperature 750 °C, duration 30 s	-30 to +50 °C
911401552145	BY698X G5 LED105/CW L1W PIR WB GM L3m	Temperature 750 °C, duration 30 s	-30 to +50 °C
911401552245	BY698X G5 LED150/NW L1W PIR WB GM L3m	Temperature 750 °C, duration 30 s	-30 to +50 °C
911401552345	BY698X G5 LED150/CW L1W PIR WB GM L3m	Temperature 750 °C, duration 30 s	-30 to +50 °C
911401552445	BY698X G5 LED200/NW L1W PIR WB GM L3m	Temperature 750 °C, duration 30 s	-30 to +50 °C
911401552545	BY698X G5 LED200/CW L1W PIR WB GM L3m	Temperature 750 °C, duration 30 s	-30 to +50 °C
911401552645	BY698X G5 LED250/NW L1W PIR WB GM L3m	Temperature 750 °C, duration 30 s	-30 to +50 °C
911401552745	BY698X G5 LED250/CW L1W PIR WB GM L3m	Temperature 750 °C, duration 30 s	-30 to +50 °C
911401552845	BY698X G5 LED300/NW L1W PIR WB GM L3m	Temperature 750 °C, duration 30 s	-30 to +50 °C
911401552945	BY698X G5 LED300/CW L1W PIR WB GM L3m	Temperature 750 °C, duration 30 s	-30 to +50 °C
911401526245	BY698P G5 LED105/NW PSU WB GC	Temperature 650 °C, duration 30 s	-30 to +50 °C
911401526345	BY698P G5 LED105/NW PSU NB GC	Temperature 650 °C, duration 30 s	-30 to +50 °C
911401526445	BY698P G5 LED105/CW PSU WB GC	Temperature 650 °C, duration 30 s	-30 to +50 °C
911401526545	BY698P G5 LED105/CW PSU NB GC	Temperature 650 °C, duration 30 s	-30 to +50 °C
911401526645	BY698P G5 LED150/NW PSU WB GC	Temperature 650 °C, duration 30 s	-30 to +50 °C
911401526745	BY698P G5 LED150/NW PSU NB GC	Temperature 650 °C, duration 30 s	-30 to +50 °C

Order Code	Full Product Name	Glow-wire test	Ambient temperature range
911401526845	BY698P G5 LED150/CW PSU WB GC	Temperature 650 °C, duration 30 s	-30 to +50 °C
911401526945	BY698P G5 LED150/CW PSU NB GC	Temperature 650 °C, duration 30 s	-30 to +50 °C
911401527045	BY698P G5 LED200/NW PSU WB GC	Temperature 650 °C, duration 30 s	-30 to +50 °C
911401527145	BY698P G5 LED200/NW PSU NB GC	Temperature 650 °C, duration 30 s	-30 to +50 °C
911401527245	BY698P G5 LED200/CW PSU WB GC	Temperature 650 °C, duration 30 s	-30 to +50 °C
911401527345	BY698P G5 LED200/CW PSU NB GC	Temperature 650 °C, duration 30 s	-30 to +50 °C
911401527445	BY698P G5 LED250/NW PSU WB GC	Temperature 650 °C, duration 30 s	-30 to +50 °C
911401527545	BY698P G5 LED250/NW PSU NB GC	Temperature 650 °C, duration 30 s	-30 to +50 °C
911401527645	BY698P G5 LED250/CW PSU WB GC	Temperature 650 °C, duration 30 s	-30 to +50 °C
911401527745	BY698P G5 LED250/CW PSU NB GC	Temperature 650 °C, duration 30 s	-30 to +50 °C
911401527845	BY698P G5 LED300/NW PSU WB GC	Temperature 650 °C, duration 30 s	-30 to +50 °C
911401527945	BY698P G5 LED300/NW PSU NB GC	Temperature 650 °C, duration 30 s	-30 to +50 °C
911401528045	BY698P G5 LED300/CW PSU WB GC	Temperature 650 °C, duration 30 s	-30 to +50 °C
911401528145	BY698P G5 LED300/CW PSU NB GC	Temperature 650 °C, duration 30 s	-30 to +50 °C
911401528245	BY698P G5 LED105/NW PSU WB GM	Temperature 650 °C, duration 30 s	-30 to +50 °C
911401528345	BY698P G5 LED105/NW PSU NB GM	Temperature 650 °C, duration 30 s	-30 to +50 °C
911401528445	BY698P G5 LED105/CW PSU WB GM	Temperature 650 °C, duration 30 s	-30 to +50 °C
911401528545	BY698P G5 LED105/CW PSU NB GM	Temperature 650 °C, duration 30 s	-30 to +50 °C
911401528645	BY698P G5 LED150/NW PSU WB GM	Temperature 650 °C, duration 30 s	-30 to +50 °C
911401528745	BY698P G5 LED150/NW PSU NB GM	Temperature 650 °C, duration 30 s	-30 to +50 °C
911401528845	BY698P G5 LED150/CW PSU WB GM	Temperature 650 °C, duration 30 s	-30 to +50 °C
911401528945	BY698P G5 LED150/CW PSU NB GM	Temperature 650 °C, duration 30 s	-30 to +50 °C
911401529045	BY698P G5 LED200/NW PSU WB GM	Temperature 650 °C, duration 30 s	-30 to +50 °C
911401529145	BY698P G5 LED200/NW PSU NB GM	Temperature 650 °C, duration 30 s	-30 to +50 °C
911401529245	BY698P G5 LED200/CW PSU WB GM	Temperature 650 °C, duration 30 s	-30 to +50 °C
911401529345	BY698P G5 LED200/CW PSU NB GM	Temperature 650 °C, duration 30 s	-30 to +50 °C
911401529445	BY698P G5 LED250/NW PSU WB GM	Temperature 650 °C, duration 30 s	-30 to +50 °C
911401529545	BY698P G5 LED250/NW PSU NB GM	Temperature 650 °C, duration 30 s	-30 to +50 °C
911401529645	BY698P G5 LED250/CW PSU WB GM	Temperature 650 °C, duration 30 s	-30 to +50 °C
911401529745	BY698P G5 LED250/CW PSU NB GM	Temperature 650 °C, duration 30 s	-30 to +50 °C
911401529845	BY698P G5 LED300/NW PSU WB GM	Temperature 650 °C, duration 30 s	-30 to +50 °C
911401529945	BY698P G5 LED300/NW PSU NB GM	Temperature 650 °C, duration 30 s	-30 to +50 °C
911401530045	BY698P G5 LED300/CW PSU WB GM	Temperature 650 °C, duration 30 s	-30 to +50 °C
911401530145	BY698P G5 LED300/CW PSU NB GM	Temperature 650 °C, duration 30 s	-30 to +50 °C
911401530245	BY698P G5 LED200/840 PSU WB CAU	Temperature 750 °C, duration 30 s	-30 to +50 °C
911401530345	BY698P G5 LED250/840 PSU WB CAU	Temperature 750 °C, duration 30 s	-30 to +50 °C
911401530445	BY698P G5 LED300/840 PSU WB CAU	Temperature 750 °C, duration 30 s	-30 to +50 °C
911401530545	BY698P G5 LED200/840 PSU WB CAU CL	Temperature 750 °C, duration 30 s	-30 to +50 °C
911401530645	BY698P G5 LED200/850 PSU WB CAU CL	Temperature 750 °C, duration 30 s	-30 to +50 °C
911401530745	BY698P G5 LED250/840 PSU WB CAU CL	Temperature 750 °C, duration 30 s	-30 to +50 °C
911401530845	BY698P G5 LED250/850 PSU WB CAU CL	Temperature 750 °C, duration 30 s	-30 to +50 °C
911401530945	BY698P G5 LED300/840 PSU WB CAU CL	Temperature 750 °C, duration 30 s	-30 to +50 °C

Order Code	Full Product Name	Glow-wire test	Ambient temperature range
911401531045	BY698P G5 LED300/850 PSU WB CAU CL	Temperature 750 °C, duration 30 s	-30 to +50 °C
911401531145	BY698P G5 LED105/NW PSD WB GC	Temperature 650 °C, duration 30 s	-30 to +50 °C
911401531245	BY698P G5 LED105/NW PSD NB GC	Temperature 650 °C, duration 30 s	-30 to +50 °C
911401531345	BY698P G5 LED105/CW PSD WB GC	Temperature 650 °C, duration 30 s	-30 to +50 °C
911401531445	BY698P G5 LED105/CW PSD NB GC	Temperature 650 °C, duration 30 s	-30 to +50 °C
911401531545	BY698P G5 LED150/NW PSD WB GC	Temperature 650 °C, duration 30 s	-30 to +50 °C
911401531645	BY698P G5 LED150/NW PSD NB GC	Temperature 650 °C, duration 30 s	-30 to +50 °C
911401531745	BY698P G5 LED150/CW PSD WB GC	Temperature 650 °C, duration 30 s	-30 to +50 °C
911401531845	BY698P G5 LED150/CW PSD NB GC	Temperature 650 °C, duration 30 s	-30 to +50 °C
911401531945	BY698P G5 LED200/NW PSD WB GC	Temperature 650 °C, duration 30 s	-30 to +50 °C
911401532045	BY698P G5 LED200/NW PSD NB GC	Temperature 650 °C, duration 30 s	-30 to +50 °C
911401532145	BY698P G5 LED200/CW PSD WB GC	Temperature 650 °C, duration 30 s	-30 to +50 °C
911401532245	BY698P G5 LED200/CW PSD NB GC	Temperature 650 °C, duration 30 s	-30 to +50 °C
911401532345	BY698P G5 LED250/NW PSD WB GC	Temperature 650 °C, duration 30 s	-30 to +50 °C
911401532445	BY698P G5 LED250/NW PSD NB GC	Temperature 650 °C, duration 30 s	-30 to +50 °C
911401532545	BY698P G5 LED250/CW PSD WB GC	Temperature 650 °C, duration 30 s	-30 to +50 °C
911401532645	BY698P G5 LED250/CW PSD NB GC	Temperature 650 °C, duration 30 s	-30 to +50 °C
911401532745	BY698P G5 LED300/NW PSD WB GC	Temperature 650 °C, duration 30 s	-30 to +50 °C
911401532845	BY698P G5 LED300/NW PSD NB GC	Temperature 650 °C, duration 30 s	-30 to +50 °C
911401532945	BY698P G5 LED300/CW PSD WB GC	Temperature 650 °C, duration 30 s	-30 to +50 °C
911401533045	BY698P G5 LED300/CW PSD NB GC	Temperature 650 °C, duration 30 s	-30 to +50 °C
911401533145	BY698P G5 LED105/NW PSD WB GM	Temperature 650 °C, duration 30 s	-30 to +50 °C
911401533245	BY698P G5 LED105/NW PSD NB GM	Temperature 650 °C, duration 30 s	-30 to +50 °C
911401533345	BY698P G5 LED105/CW PSD WB GM	Temperature 650 °C, duration 30 s	-30 to +50 °C
911401533445	BY698P G5 LED105/CW PSD NB GM	Temperature 650 °C, duration 30 s	-30 to +50 °C
911401533545	BY698P G5 LED150/NW PSD WB GM	Temperature 650 °C, duration 30 s	-30 to +50 °C
911401533645	BY698P G5 LED150/NW PSD NB GM	Temperature 650 °C, duration 30 s	-30 to +50 °C
911401533745	BY698P G5 LED150/CW PSD WB GM	Temperature 650 °C, duration 30 s	-30 to +50 °C
911401533845	BY698P G5 LED150/CW PSD NB GM	Temperature 650 °C, duration 30 s	-30 to +50 °C
911401533945	BY698P G5 LED200/NW PSD WB GM	Temperature 650 °C, duration 30 s	-30 to +50 °C
911401534045	BY698P G5 LED200/NW PSD NB GM	Temperature 650 °C, duration 30 s	-30 to +50 °C
911401534145	BY698P G5 LED200/CW PSD WB GM	Temperature 650 °C, duration 30 s	-30 to +50 °C
911401534245	BY698P G5 LED200/CW PSD NB GM	Temperature 650 °C, duration 30 s	-30 to +50 °C
911401534345	BY698P G5 LED250/NW PSD WB GM	Temperature 650 °C, duration 30 s	-30 to +50 °C
911401534445	BY698P G5 LED250/NW PSD NB GM	Temperature 650 °C, duration 30 s	-30 to +50 °C
911401534545	BY698P G5 LED250/CW PSD WB GM	Temperature 650 °C, duration 30 s	-30 to +50 °C
911401534645	BY698P G5 LED250/CW PSD NB GM	Temperature 650 °C, duration 30 s	-30 to +50 °C
911401534745	BY698P G5 LED300/NW PSD WB GM	Temperature 650 °C, duration 30 s	-30 to +50 °C
911401534845	BY698P G5 LED300/NW PSD NB GM	Temperature 650 °C, duration 30 s	-30 to +50 °C
911401534945	BY698P G5 LED300/CW PSD WB GM	Temperature 650 °C, duration 30 s	-30 to +50 °C
911401535045	BY698P G5 LED300/CW PSD NB GM	Temperature 650 °C, duration 30 s	-30 to +50 °C
911401535145	BY698P G5 LED200/840 PSD WB CAU	Temperature 750 °C, duration 30 s	-30 to +50 °C

Order Code	Full Product Name	Glow-wire test	Ambient temperature range
911401535245	BY698P G5 LED250/840 PSD WB CAU	Temperature 750 °C, duration 30 s	-30 to +50 °C
911401535445	BY698P G5 LED300/840 PSD WB CAU	Temperature 750 °C, duration 30 s	-30 to +50 °C
911401535545	BY698P G5 LED105/NW PSU WB LA	Temperature 650 °C, duration 30 s	-30 to +50 °C
911401535645	BY698P G5 LED105/CW PSU WB LA	Temperature 650 °C, duration 30 s	-30 to +50 °C
911401535745	BY698P G5 LED150/NW PSU WB LA	Temperature 650 °C, duration 30 s	-30 to +50 °C
911401535845	BY698P G5 LED150/CW PSU WB LA	Temperature 650 °C, duration 30 s	-30 to +50 °C
911401535945	BY698P G5 LED200/NW PSU WB LA	Temperature 650 °C, duration 30 s	-30 to +50 °C
911401536045	BY698P G5 LED200/NW PSU NB LA	Temperature 650 °C, duration 30 s	-30 to +50 °C
911401536145	BY698P G5 LED200/CW PSU WB LA	Temperature 650 °C, duration 30 s	-30 to +50 °C
911401536245	BY698P G5 LED200/CW PSU NB LA	Temperature 650 °C, duration 30 s	-30 to +50 °C
911401536345	BY698P G5 LED250/NW PSU WB LA	Temperature 650 °C, duration 30 s	-30 to +50 °C
911401536445	BY698P G5 LED250/NW PSU NB LA	Temperature 650 °C, duration 30 s	-30 to +50 °C
911401536545	BY698P G5 LED250/CW PSU WB LA	Temperature 650 °C, duration 30 s	-30 to +50 °C
911401536645	BY698P G5 LED250/CW PSU NB LA	Temperature 650 °C, duration 30 s	-30 to +50 °C
911401536745	BY698P G5 LED300/NW PSU WB LA	Temperature 650 °C, duration 30 s	-30 to +50 °C
911401536845	BY698P G5 LED300/NW PSU NB LA	Temperature 650 °C, duration 30 s	-30 to +50 °C
911401536945	BY698P G5 LED300/CW PSU WB LA	Temperature 650 °C, duration 30 s	-30 to +50 °C
911401537045	BY698P G5 LED300/CW PSU NB LA	Temperature 650 °C, duration 30 s	-30 to +50 °C
911401537145	BY698P G5 LED105/NW PSD WB LA	Temperature 650 °C, duration 30 s	-30 to +50 °C
911401537245	BY698P G5 LED105/CW PSD WB LA	Temperature 650 °C, duration 30 s	-30 to +50 °C
911401537345	BY698P G5 LED150/NW PSD WB LA	Temperature 650 °C, duration 30 s	-30 to +50 °C
911401537445	BY698P G5 LED150/CW PSD WB LA	Temperature 650 °C, duration 30 s	-30 to +50 °C
911401537545	BY698P G5 LED200/NW PSD WB LA	Temperature 650 °C, duration 30 s	-30 to +50 °C
911401537645	BY698P G5 LED200/NW PSD NB LA	Temperature 650 °C, duration 30 s	-30 to +50 °C
911401537745	BY698P G5 LED200/CW PSD WB LA	Temperature 650 °C, duration 30 s	-30 to +50 °C
911401537845	BY698P G5 LED200/CW PSD NB LA	Temperature 650 °C, duration 30 s	-30 to +50 °C
911401537945	BY698P G5 LED250/NW PSD WB LA	Temperature 650 °C, duration 30 s	-30 to +50 °C
911401538045	BY698P G5 LED250/NW PSD NB LA	Temperature 650 °C, duration 30 s	-30 to +50 °C
911401538145	BY698P G5 LED250/CW PSD WB LA	Temperature 650 °C, duration 30 s	-30 to +50 °C
911401538245	BY698P G5 LED250/CW PSD NB LA	Temperature 650 °C, duration 30 s	-30 to +50 °C
911401538345	BY698P G5 LED300/NW PSD WB LA	Temperature 650 °C, duration 30 s	-30 to +50 °C
911401538445	BY698P G5 LED300/NW PSD NB LA	Temperature 650 °C, duration 30 s	-30 to +50 °C
911401538545	BY698P G5 LED300/CW PSD WB LA	Temperature 650 °C, duration 30 s	-30 to +50 °C
911401538645	BY698P G5 LED300/CW PSD NB LA	Temperature 650 °C, duration 30 s	-30 to +50 °C
911401538745	BY698P G5 LED105/NW PSU WB GM L3m	Temperature 650 °C, duration 30 s	-30 to +50 °C
911401538845	BY698P G5 LED105/NW PSU NB GM L3m	Temperature 650 °C, duration 30 s	-30 to +50 °C
911401538945	BY698P G5 LED105/CW PSU WB GM L3m	Temperature 650 °C, duration 30 s	-30 to +50 °C
911401539045	BY698P G5 LED105/CW PSU NB GM L3m	Temperature 650 °C, duration 30 s	-30 to +50 °C
911401539145	BY698P G5 LED150/NW PSU WB GM L3m	Temperature 650 °C, duration 30 s	-30 to +50 °C
911401539245	BY698P G5 LED150/NW PSU NB GM L3m	Temperature 650 °C, duration 30 s	-30 to +50 °C
911401539345	BY698P G5 LED150/CW PSU WB GM L3m	Temperature 650 °C, duration 30 s	-30 to +50 °C
911401539445	BY698P G5 LED150/CW PSU NB GM L3m	Temperature 650 °C, duration 30 s	-30 to +50 °C

Order Code	Full Product Name	Glow-wire test	Ambient temperature range
911401539545	BY698P G5 LED200/NW PSU WB GM L3m	Temperature 650 °C, duration 30 s	-30 to +50 °C
911401539645	BY698P G5 LED200/NW PSU NB GM L3m	Temperature 650 °C, duration 30 s	-30 to +50 °C
911401539745	BY698P G5 LED200/CW PSU WB GM L3m	Temperature 650 °C, duration 30 s	-30 to +50 °C
911401539845	BY698P G5 LED200/CW PSU NB GM L3m	Temperature 650 °C, duration 30 s	-30 to +50 °C
911401539945	BY698P G5 LED250/NW PSU WB GM L3m	Temperature 650 °C, duration 30 s	-30 to +50 °C
911401540045	BY698P G5 LED250/NW PSU NB GM L3m	Temperature 650 °C, duration 30 s	-30 to +50 °C
911401540145	BY698P G5 LED250/CW PSU WB GM L3m	Temperature 650 °C, duration 30 s	-30 to +50 °C
911401540245	BY698P G5 LED250/CW PSU NB GM L3m	Temperature 650 °C, duration 30 s	-30 to +50 °C
911401540345	BY698P G5 LED300/NW PSU WB GM L3m	Temperature 650 °C, duration 30 s	-30 to +50 °C
911401540445	BY698P G5 LED300/NW PSU NB GM L3m	Temperature 650 °C, duration 30 s	-30 to +50 °C
911401540545	BY698P G5 LED300/CW PSU WB GM L3m	Temperature 650 °C, duration 30 s	-30 to +50 °C
911401540645	BY698P G5 LED300/CW PSU NB GM L3m	Temperature 650 °C, duration 30 s	-30 to +50 °C
911401540745	BY690P LED105/NW PSU WB GC	Temperature 650 °C, duration 30 s	-40 to +50 °C
911401540845	BY690P LED105/CW PSU WB GC	Temperature 650 °C, duration 30 s	-40 to +50 °C
911401540945	BY690P LED150/NW PSU WB GC	Temperature 650 °C, duration 30 s	-40 to +50 °C
911401541045	BY690P LED150/CW PSU WB GC	Temperature 650 °C, duration 30 s	-40 to +50 °C
911401541145	BY690P LED200/NW PSU WB GC	Temperature 650 °C, duration 30 s	-40 to +50 °C
911401541245	BY690P LED200/CW PSU WB GC	Temperature 650 °C, duration 30 s	-40 to +50 °C
911401541345	BY690P LED250/NW PSU WB GC	Temperature 650 °C, duration 30 s	-35 °C to 50 °C
911401541445	BY690P LED250/CW PSU WB GC	Temperature 650 °C, duration 30 s	-35 °C to 50 °C
911401541545	BY690P LED300/NW PSU WB GC	Temperature 650 °C, duration 30 s	-35 °C to 50 °C
911401541645	BY690P LED300/CW PSU WB GC	Temperature 650 °C, duration 30 s	-35 °C to 50 °C
911401541745	BY690P LED105/NW PSU WB GM	Temperature 650 °C, duration 30 s	-40 to +50 °C
911401541845	BY690P LED105/CW PSU WB GM	Temperature 650 °C, duration 30 s	-40 to +50 °C
911401541945	BY690P LED150/NW PSU WB GM	Temperature 650 °C, duration 30 s	-40 to +50 °C
911401542045	BY690P LED150/CW PSU WB GM	Temperature 650 °C, duration 30 s	-40 to +50 °C
911401542145	BY690P LED200/NW PSU WB GM	Temperature 650 °C, duration 30 s	-40 to +50 °C
911401542245	BY690P LED200/CW PSU WB GM	Temperature 650 °C, duration 30 s	-40 to +50 °C
911401542345	BY690P LED250/NW PSU WB GM	Temperature 650 °C, duration 30 s	-35 °C to 50 °C
911401542445	BY690P LED250/CW PSU WB GM	Temperature 650 °C, duration 30 s	-35 °C to 50 °C
911401542545	BY690P LED300/NW PSU WB GM	Temperature 650 °C, duration 30 s	-35 °C to 50 °C
911401542645	BY690P LED300/CW PSU WB GM	Temperature 650 °C, duration 30 s	-35 °C to 50 °C
911401580944	BY698P G5 LED105/NW PSU WB TW	Temperature 650 °C, duration 30 s	-30 to +50 °C
911401581044	BY698P G5 LED105/NW PSU NB TW	Temperature 650 °C, duration 30 s	-30 to +50 °C
911401581144	BY698P G5 LED105/CW PSU WB TW	Temperature 650 °C, duration 30 s	-30 to +50 °C
911401581244	BY698P G5 LED105/CW PSU NB TW	Temperature 650 °C, duration 30 s	-30 to +50 °C
911401581344	BY698P G5 LED150/NW PSU WB TW	Temperature 650 °C, duration 30 s	-30 to +50 °C
911401581444	BY698P G5 LED150/NW PSU NB TW	Temperature 650 °C, duration 30 s	-30 to +50 °C
911401581544	BY698P G5 LED150/CW PSU WB TW	Temperature 650 °C, duration 30 s	-30 to +50 °C
911401581644	BY698P G5 LED150/CW PSU NB TW	Temperature 650 °C, duration 30 s	-30 to +50 °C
911401581744	BY698P G5 LED200/NW PSU WB TW	Temperature 650 °C, duration 30 s	-30 to +50 °C
911401581844	BY698P G5 LED200/NW PSU NB TW	Temperature 650 °C, duration 30 s	-30 to +50 °C

Order Code	Full Product Name	Glow-wire test	Ambient temperature range
911401581944	BY698P G5 LED200/CW PSU WB TW	Temperature 650 °C, duration 30 s	-30 to +50 °C
911401582044	BY698P G5 LED200/CW PSU NB TW	Temperature 650 °C, duration 30 s	-30 to +50 °C
911401582144	BY698P G5 LED250/NW PSU WB TW	Temperature 650 °C, duration 30 s	-30 to +50 °C
911401582244	BY698P G5 LED250/NW PSU NB TW	Temperature 650 °C, duration 30 s	-30 to +50 °C
911401582344	BY698P G5 LED250/CW PSU WB TW	Temperature 650 °C, duration 30 s	-30 to +50 °C
911401582444	BY698P G5 LED250/CW PSU NB TW	Temperature 650 °C, duration 30 s	-30 to +50 °C
911401582544	BY698P G5 LED300/NW PSU WB TW	Temperature 650 °C, duration 30 s	-30 to +50 °C
911401582644	BY698P G5 LED300/NW PSU NB TW	Temperature 650 °C, duration 30 s	-30 to +50 °C
911401582744	BY698P G5 LED300/CW PSU WB TW	Temperature 650 °C, duration 30 s	-30 to +50 °C
911401582844	BY698P G5 LED300/CW PSU NB TW	Temperature 650 °C, duration 30 s	-30 to +50 °C
911401543245	BY698X G5 LED150/NW Connected WB GC	Temperature 650 °C, duration 30 s	-30 to +50 °C
911401543345	BY698X G5 LED150/CW Connected WB GC	Temperature 650 °C, duration 30 s	-30 to +50 °C
911401543445	BY698X G5 LED200/NW Connected WB GC	Temperature 650 °C, duration 30 s	-30 to +50 °C
911401543545	BY698X G5 LED200/CW Connected WB GC	Temperature 650 °C, duration 30 s	-30 to +50 °C
911401543645	BY698X G5 LED250/NW Connected WB GC	Temperature 650 °C, duration 30 s	-30 to +50 °C
911401543745	BY698X G5 LED250/CW Connected WB GC	Temperature 650 °C, duration 30 s	-30 to +50 °C
911401543845	BY698X G5 LED300/NW Connected WB GC	Temperature 650 °C, duration 30 s	-30 to +50 °C
911401543945	BY698X G5 LED300/NW Connected NB GC	Temperature 650 °C, duration 30 s	-30 to +50 °C
911401544045	BY698X G5 LED300/CW Connected WB GC	Temperature 650 °C, duration 30 s	-30 to +50 °C
911401544145	BY698X G5 LED300/CW Connected NB GC	Temperature 650 °C, duration 30 s	-30 to +50 °C
911401544245	BY698X G5 LED150/NW Connected WB GM	Temperature 650 °C, duration 30 s	-30 to +50 °C
911401544345	BY698X G5 LED150/NW Connected NB GM	Temperature 650 °C, duration 30 s	-30 to +50 °C
911401544445	BY698X G5 LED150/CW Connected WB GM	Temperature 650 °C, duration 30 s	-30 to +50 °C
911401544545	BY698X G5 LED150/CW Connected NB GM	Temperature 650 °C, duration 30 s	-30 to +50 °C
911401544645	BY698X G5 LED200/NW Connected WB GM	Temperature 650 °C, duration 30 s	-30 to +50 °C
911401544745	BY698X G5 LED200/NW Connected NB GM	Temperature 650 °C, duration 30 s	-30 to +50 °C
911401544845	BY698X G5 LED200/CW Connected WB GM	Temperature 650 °C, duration 30 s	-30 to +50 °C
911401544945	BY698X G5 LED200/CW Connected NB GM	Temperature 650 °C, duration 30 s	-30 to +50 °C
911401545045	BY698X G5 LED250/NW Connected WB GM	Temperature 650 °C, duration 30 s	-30 to +50 °C
911401545145	BY698X G5 LED250/NW Connected NB GM	Temperature 650 °C, duration 30 s	-30 to +50 °C
911401545245	BY698X G5 LED250/CW Connected WB GM	Temperature 650 °C, duration 30 s	-30 to +50 °C
911401545345	BY698X G5 LED250/CW Connected NB GM	Temperature 650 °C, duration 30 s	-30 to +50 °C
911401545445	BY698X G5 LED300/NW Connected WB GM	Temperature 650 °C, duration 30 s	-30 to +50 °C
911401545545	BY698X G5 LED300/NW Connected NB GM	Temperature 650 °C, duration 30 s	-30 to +50 °C
911401545645	BY698X G5 LED300/CW Connected WB GM	Temperature 650 °C, duration 30 s	-30 to +50 °C
911401545745	BY698X G5 LED300/CW Connected NB GM	Temperature 650 °C, duration 30 s	-30 to +50 °C
911401545845	BY698X G5 LED200/840 Connected WB CAU	Temperature 750 °C, duration 30 s	-30 to +50 °C
911401545945	BY698X G5 LED250/840 Connected WB CAU	Temperature 750 °C, duration 30 s	-30 to +50 °C
911401546045	BY698X G5 LED300/840 Connected WB CAU	Temperature 750 °C, duration 30 s	-30 to +50 °C
911401546145	BY698X G5 LED150/NW Connected WB LA	Temperature 650 °C, duration 30 s	-30 to +50 °C
911401546245	BY698X G5 LED150/CW Connected WB LA	Temperature 650 °C, duration 30 s	-30 to +50 °C
911401546345	BY698X G5 LED200/NW Connected WB LA	Temperature 650 °C, duration 30 s	-30 to +50 °C

Order Code	Full Product Name	Glow-wire test	Ambient temperature range
911401546445	BY698X G5 LED200/NW Connected NB LA	Temperature 650 °C, duration 30 s	-30 to +50 °C
911401546545	BY698X G5 LED200/CW Connected WB LA	Temperature 650 °C, duration 30 s	-30 to +50 °C
911401546645	BY698X G5 LED200/CW Connected NB LA	Temperature 650 °C, duration 30 s	-30 to +50 °C
911401546745	BY698X G5 LED250/NW Connected WB LA	Temperature 650 °C, duration 30 s	-30 to +50 °C
911401546845	BY698X G5 LED250/NW Connected NB LA	Temperature 650 °C, duration 30 s	-30 to +50 °C
911401546945	BY698X G5 LED250/CW Connected WB LA	Temperature 650 °C, duration 30 s	-30 to +50 °C
911401547045	BY698X G5 LED250/CW Connected NB LA	Temperature 650 °C, duration 30 s	-30 to +50 °C
911401547145	BY698X G5 LED300/NW Connected WB LA	Temperature 650 °C, duration 30 s	-30 to +50 °C
911401547245	BY698X G5 LED300/NW Connected NB LA	Temperature 650 °C, duration 30 s	-30 to +50 °C
911401547345	BY698X G5 LED300/CW Connected WB LA	Temperature 650 °C, duration 30 s	-30 to +50 °C
911401547445	BY698X G5 LED300/CW Connected NB LA	Temperature 650 °C, duration 30 s	-30 to +50 °C
911401547545	BY698X G5 LED105/NW L1W MW WB GM	Temperature 750 °C, duration 30 s	-30 to +50 °C
911401547645	BY698X G5 LED105/CW L1W MW WB GM	Temperature 750 °C, duration 30 s	-30 to +50 °C
911401547745	BY698X G5 LED150/NW L1W MW WB GM	Temperature 750 °C, duration 30 s	-30 to +50 °C
911401547845	BY698X G5 LED150/CW L1W MW WB GM	Temperature 750 °C, duration 30 s	-30 to +50 °C
911401547945	BY698X G5 LED200/NW L1W MW WB GM	Temperature 750 °C, duration 30 s	-30 to +50 °C
911401548045	BY698X G5 LED200/CW L1W MW WB GM	Temperature 750 °C, duration 30 s	-30 to +50 °C
911401548145	BY698X G5 LED250/NW L1W MW WB GM	Temperature 750 °C, duration 30 s	-30 to +50 °C
911401548245	BY698X G5 LED250/CW L1W MW WB GM	Temperature 750 °C, duration 30 s	-30 to +50 °C
911401548345	BY698X G5 LED300/NW L1W MW WB GM	Temperature 750 °C, duration 30 s	-30 to +50 °C
911401548445	BY698X G5 LED300/CW L1W MW WB GM	Temperature 750 °C, duration 30 s	-30 to +50 °C
911401548545	BY698X G5 LED105/NW L1W MW WB GM L3m	Temperature 750 °C, duration 30 s	-30 to +50 °C
911401548645	BY698X G5 LED105/CW L1W MW WB GM L3m	Temperature 750 °C, duration 30 s	-30 to +50 °C
911401548745	BY698X G5 LED150/NW L1W MW WB GM L3m	Temperature 750 °C, duration 30 s	-30 to +50 °C
911401548845	BY698X G5 LED150/CW L1W MW WB GM L3m	Temperature 750 °C, duration 30 s	-30 to +50 °C
911401548945	BY698X G5 LED200/NW L1W MW WB GM L3m	Temperature 750 °C, duration 30 s	-30 to +50 °C
911401549045	BY698X G5 LED200/CW L1W MW WB GM L3m	Temperature 750 °C, duration 30 s	-30 to +50 °C
911401549145	BY698X G5 LED250/NW L1W MW WB GM L3m	Temperature 750 °C, duration 30 s	-30 to +50 °C
911401549245	BY698X G5 LED250/CW L1W MW WB GM L3m	Temperature 750 °C, duration 30 s	-30 to +50 °C
911401549345	BY698X G5 LED300/NW L1W MW WB GM L3m	Temperature 750 °C, duration 30 s	-30 to +50 °C
911401549445	BY698X G5 LED300/CW L1W MW WB GM L3m	Temperature 750 °C, duration 30 s	-30 to +50 °C

Initial Performance (IEC Compliant)

Order Code	Full Product Name	Luminous flux tolerance	Initial chromaticity
911401549545	BY698X G5 LED105/NW L1W PIR WB GC	+/-10%	(0.386, 0.384) SDCM<5
911401549645	BY698X G5 LED105/CW L1W PIR WB GC	+/-10%	(0.317, 0.338) SDCM<5
911401549745	BY698X G5 LED150/NW L1W PIR WB GC	+/-10%	(0.386, 0.384) SDCM<5
911401549845	BY698X G5 LED150/CW L1W PIR WB GC	+/-10%	(0.317, 0.338) SDCM<5
911401549945	BY698X G5 LED200/NW L1W PIR WB GC	+/-10%	(0.386, 0.384) SDCM<5
911401550045	BY698X G5 LED200/CW L1W PIR WB GC	+/-10%	(0.317, 0.338) SDCM<5
911401550145	BY698X G5 LED250/NW L1W PIR WB GC	+/-10%	(0.386, 0.384) SDCM<5

Order Code	Full Product Name	Luminous flux tolerance	Initial chromaticity
911401550245	BY698X G5 LED250/CW L1W PIR WB GC	+/-10%	(0.317, 0.338) SDCM<5
911401550345	BY698X G5 LED300/NW L1W PIR WB GC	+/-10%	(0.386, 0.384) SDCM<5
911401550445	BY698X G5 LED300/CW L1W PIR WB GC	+/-10%	(0.317, 0.338) SDCM<5
911401550545	BY698X G5 LED105/NW L1W PIR WB GM	+/-10%	(0.386, 0.384) SDCM<5
911401550645	BY698X G5 LED105/CW L1W PIR WB GM	+/-10%	(0.317, 0.338) SDCM<5
911401550745	BY698X G5 LED150/NW L1W PIR WB GM	+/-10%	(0.386, 0.384) SDCM<5
911401550845	BY698X G5 LED150/CW L1W PIR WB GM	+/-10%	(0.317, 0.338) SDCM<5
911401550945	BY698X G5 LED200/NW L1W PIR WB GM	+/-10%	(0.386, 0.384) SDCM<5
911401551045	BY698X G5 LED200/CW L1W PIR WB GM	+/-10%	(0.317, 0.338) SDCM<5
911401551145	BY698X G5 LED250/NW L1W PIR WB GM	+/-10%	(0.386, 0.384) SDCM<5
911401551245	BY698X G5 LED250/CW L1W PIR WB GM	+/-10%	(0.317, 0.338) SDCM<5
911401551345	BY698X G5 LED300/NW L1W PIR WB GM	+/-10%	(0.386, 0.384) SDCM<5
911401551445	BY698X G5 LED300/CW L1W PIR WB GM	+/-10%	(0.317, 0.338) SDCM<5
911401551545	BY698X G5 LED105/840 L1W PIR WB CAU	+/-10%	-
911401551645	BY698X G5 LED150/840 L1W PIR WB CAU	+/-10%	-
911401551745	BY698X G5 LED200/840 L1W PIR WB CAU	+/-10%	-
911401551845	BY698X G5 LED250/840 L1W PIR WB CAU	+/-10%	-
911401551945	BY698X G5 LED300/840 L1W PIR WB CAU	+/-10%	-
911401552045	BY698X G5 LED105/NW L1W PIR WB GM L3m	+/-10%	(0.386, 0.384) SDCM<5
911401552145	BY698X G5 LED105/CW L1W PIR WB GM L3m	+/-10%	(0.317, 0.338) SDCM<5
911401552245	BY698X G5 LED150/NW L1W PIR WB GM L3m	+/-10%	(0.386, 0.384) SDCM<5
911401552345	BY698X G5 LED150/CW L1W PIR WB GM L3m	+/-10%	(0.317, 0.338) SDCM<5
911401552445	BY698X G5 LED200/NW L1W PIR WB GM L3m	+/-10%	(0.386, 0.384) SDCM<5
911401552545	BY698X G5 LED200/CW L1W PIR WB GM L3m	+/-10%	(0.317, 0.338) SDCM<5
911401552645	BY698X G5 LED250/NW L1W PIR WB GM L3m	+/-10%	(0.386, 0.384) SDCM<5
911401552745	BY698X G5 LED250/CW L1W PIR WB GM L3m	+/-10%	(0.317, 0.338) SDCM<5
911401552845	BY698X G5 LED300/NW L1W PIR WB GM L3m	+/-10%	(0.386, 0.384) SDCM<5
911401552945	BY698X G5 LED300/CW L1W PIR WB GM L3m	+/-10%	(0.317, 0.338) SDCM<5
911401526245	BY698P G5 LED105/NW PSU WB GC	-10% / +10%	(0.386, 0.384) SDCM<5
911401526345	BY698P G5 LED105/NW PSU NB GC	-10% / +10%	(0.386, 0.384) SDCM<5
911401526445	BY698P G5 LED105/CW PSU WB GC	-10% / +10%	(0.317, 0.338) SDCM<5
911401526545	BY698P G5 LED105/CW PSU NB GC	-10% / +10%	(0.317, 0.338) SDCM<5
911401526645	BY698P G5 LED150/NW PSU WB GC	-10% / +10%	(0.386, 0.384) SDCM<5
911401526745	BY698P G5 LED150/NW PSU NB GC	-10% / +10%	(0.386, 0.384) SDCM<5
911401526845	BY698P G5 LED150/CW PSU WB GC	-10% / +10%	(0.317, 0.338) SDCM<5
911401526945	BY698P G5 LED150/CW PSU NB GC	-10% / +10%	(0.317, 0.338) SDCM<5
911401527045	BY698P G5 LED200/NW PSU WB GC	-10% / +10%	(0.386, 0.384) SDCM<5
911401527145	BY698P G5 LED200/NW PSU NB GC	-10% / +10%	(0.386, 0.384) SDCM<5
911401527245	BY698P G5 LED200/CW PSU WB GC	-10% / +10%	(0.317, 0.338) SDCM<5
911401527345	BY698P G5 LED200/CW PSU NB GC	-10% / +10%	(0.317, 0.338) SDCM<5
911401527445	BY698P G5 LED250/NW PSU WB GC	-10% / +10%	(0.386, 0.384) SDCM<5
911401527545	BY698P G5 LED250/NW PSU NB GC	-10% / +10%	(0.386, 0.384) SDCM<5

Order Code	Full Product Name	Luminous flux tolerance	Initial chromaticity
911401527645	BY698P G5 LED250/CW PSU WB GC	-10% / +10%	(0.317, 0.338) SDCM<5
911401527745	BY698P G5 LED250/CW PSU NB GC	-10% / +10%	(0.317, 0.338) SDCM<5
911401527845	BY698P G5 LED300/NW PSU WB GC	-10% / +10%	(0.386, 0.384) SDCM<5
911401527945	BY698P G5 LED300/NW PSU NB GC	-10% / +10%	(0.386, 0.384) SDCM<5
911401528045	BY698P G5 LED300/CW PSU WB GC	-10% / +10%	(0.317, 0.338) SDCM<5
911401528145	BY698P G5 LED300/CW PSU NB GC	-10% / +10%	(0.317, 0.338) SDCM<5
911401528245	BY698P G5 LED105/NW PSU WB GM	-10% / +10%	(0.386, 0.384) SDCM<5
911401528345	BY698P G5 LED105/NW PSU NB GM	-10% / +10%	(0.386, 0.384) SDCM<5
911401528445	BY698P G5 LED105/CW PSU WB GM	-10% / +10%	(0.317, 0.338) SDCM<5
911401528545	BY698P G5 LED105/CW PSU NB GM	-10% / +10%	(0.317, 0.338) SDCM<5
911401528645	BY698P G5 LED150/NW PSU WB GM	-10% / +10%	(0.386, 0.384) SDCM<5
911401528745	BY698P G5 LED150/NW PSU NB GM	-10% / +10%	(0.386, 0.384) SDCM<5
911401528845	BY698P G5 LED150/CW PSU WB GM	-10% / +10%	(0.317, 0.338) SDCM<5
911401528945	BY698P G5 LED150/CW PSU NB GM	-10% / +10%	(0.317, 0.338) SDCM<5
911401529045	BY698P G5 LED200/NW PSU WB GM	-10% / +10%	(0.386, 0.384) SDCM<5
911401529145	BY698P G5 LED200/NW PSU NB GM	-10% / +10%	(0.386, 0.384) SDCM<5
911401529245	BY698P G5 LED200/CW PSU WB GM	-10% / +10%	(0.317, 0.338) SDCM<5
911401529345	BY698P G5 LED200/CW PSU NB GM	-10% / +10%	(0.317, 0.338) SDCM<5
911401529445	BY698P G5 LED250/NW PSU WB GM	-10% / +10%	(0.386, 0.384) SDCM<5
911401529545	BY698P G5 LED250/NW PSU NB GM	-10% / +10%	(0.386, 0.384) SDCM<5
911401529645	BY698P G5 LED250/CW PSU WB GM	-10% / +10%	(0.317, 0.338) SDCM<5
911401529745	BY698P G5 LED250/CW PSU NB GM	-10% / +10%	(0.317, 0.338) SDCM<5
911401529845	BY698P G5 LED300/NW PSU WB GM	-10% / +10%	(0.386, 0.384) SDCM<5
911401529945	BY698P G5 LED300/NW PSU NB GM	-10% / +10%	(0.386, 0.384) SDCM<5
911401530045	BY698P G5 LED300/CW PSU WB GM	-10% / +10%	(0.317, 0.338) SDCM<5
911401530145	BY698P G5 LED300/CW PSU NB GM	-10% / +10%	(0.317, 0.338) SDCM<5
911401530245	BY698P G5 LED200/840 PSU WB CAU	-10% / +10%	(0.386, 0.384) SDCM<5
911401530345	BY698P G5 LED250/840 PSU WB CAU	-10% / +10%	(0.386, 0.384) SDCM<5
911401530445	BY698P G5 LED300/840 PSU WB CAU	-10% / +10%	(0.386, 0.384) SDCM<5
911401530545	BY698P G5 LED200/840 PSU WB CAU CL	-10% / +10%	(0.386, 0.384) SDCM<5
911401530645	BY698P G5 LED200/850 PSU WB CAU CL	-10% / +10%	(0.386, 0.384) SDCM<5
911401530745	BY698P G5 LED250/840 PSU WB CAU CL	-10% / +10%	(0.386, 0.384) SDCM<5
911401530845	BY698P G5 LED250/850 PSU WB CAU CL	-10% / +10%	-
911401530945	BY698P G5 LED300/840 PSU WB CAU CL	-10% / +10%	(0.386, 0.384) SDCM<5
911401531045	BY698P G5 LED300/850 PSU WB CAU CL	-10% / +10%	-
911401531145	BY698P G5 LED105/NW PSD WB GC	-10% / +10%	(0.386, 0.384) SDCM<5
911401531245	BY698P G5 LED105/NW PSD NB GC	-10% / +10%	(0.386, 0.384) SDCM<5
911401531345	BY698P G5 LED105/CW PSD WB GC	-10% / +10%	(0.317, 0.338) SDCM<5
911401531445	BY698P G5 LED105/CW PSD NB GC	-10% / +10%	(0.317, 0.338) SDCM<5
911401531545	BY698P G5 LED150/NW PSD WB GC	-10% / +10%	(0.386, 0.384) SDCM<5
911401531645	BY698P G5 LED150/NW PSD NB GC	-10% / +10%	(0.386, 0.384) SDCM<5
911401531745	BY698P G5 LED150/CW PSD WB GC	-10% / +10%	(0.317, 0.338) SDCM<5

Order Code	Full Product Name	Luminous flux tolerance	Initial chromaticity
911401531845	BY698P G5 LED150/CW PSD NB GC	-10% / +10%	(0.317, 0.338) SDCM<5
911401531945	BY698P G5 LED200/NW PSD WB GC	-10% / +10%	(0.386, 0.384) SDCM<5
911401532045	BY698P G5 LED200/NW PSD NB GC	-10% / +10%	(0.386, 0.384) SDCM<5
911401532145	BY698P G5 LED200/CW PSD WB GC	-10% / +10%	(0.317, 0.338) SDCM<5
911401532245	BY698P G5 LED200/CW PSD NB GC	-10% / +10%	(0.317, 0.338) SDCM<5
911401532345	BY698P G5 LED250/NW PSD WB GC	-10% / +10%	(0.386, 0.384) SDCM<5
911401532445	BY698P G5 LED250/NW PSD NB GC	-10% / +10%	(0.386, 0.384) SDCM<5
911401532545	BY698P G5 LED250/CW PSD WB GC	-10% / +10%	(0.317, 0.338) SDCM<5
911401532645	BY698P G5 LED250/CW PSD NB GC	-10% / +10%	(0.317, 0.338) SDCM<5
911401532745	BY698P G5 LED300/NW PSD WB GC	-10% / +10%	(0.386, 0.384) SDCM<5
911401532845	BY698P G5 LED300/NW PSD NB GC	-10% / +10%	(0.386, 0.384) SDCM<5
911401532945	BY698P G5 LED300/CW PSD WB GC	-10% / +10%	(0.317, 0.338) SDCM<5
911401533045	BY698P G5 LED300/CW PSD NB GC	-10% / +10%	(0.317, 0.338) SDCM<5
911401533145	BY698P G5 LED105/NW PSD WB GM	-10% / +10%	(0.386, 0.384) SDCM<5
911401533245	BY698P G5 LED105/NW PSD NB GM	-10% / +10%	(0.386, 0.384) SDCM<5
911401533345	BY698P G5 LED105/CW PSD WB GM	-10% / +10%	(0.317, 0.338) SDCM<5
911401533445	BY698P G5 LED105/CW PSD NB GM	-10% / +10%	(0.317, 0.338) SDCM<5
911401533545	BY698P G5 LED150/NW PSD WB GM	-10% / +10%	(0.386, 0.384) SDCM<5
911401533645	BY698P G5 LED150/NW PSD NB GM	-10% / +10%	(0.386, 0.384) SDCM<5
911401533745	BY698P G5 LED150/CW PSD WB GM	-10% / +10%	(0.317, 0.338) SDCM<5
911401533845	BY698P G5 LED150/CW PSD NB GM	-10% / +10%	(0.317, 0.338) SDCM<5
911401533945	BY698P G5 LED200/NW PSD WB GM	-10% / +10%	(0.386, 0.384) SDCM<5
911401534045	BY698P G5 LED200/NW PSD NB GM	-10% / +10%	(0.386, 0.384) SDCM<5
911401534145	BY698P G5 LED200/CW PSD WB GM	-10% / +10%	(0.317, 0.338) SDCM<5
911401534245	BY698P G5 LED200/CW PSD NB GM	-10% / +10%	(0.317, 0.338) SDCM<5
911401534345	BY698P G5 LED250/NW PSD WB GM	-10% / +10%	(0.386, 0.384) SDCM<5
911401534445	BY698P G5 LED250/NW PSD NB GM	-10% / +10%	(0.386, 0.384) SDCM<5
911401534545	BY698P G5 LED250/CW PSD WB GM	-10% / +10%	(0.317, 0.338) SDCM<5
911401534645	BY698P G5 LED250/CW PSD NB GM	-10% / +10%	(0.317, 0.338) SDCM<5
911401534745	BY698P G5 LED300/NW PSD WB GM	-10% / +10%	(0.386, 0.384) SDCM<5
911401534845	BY698P G5 LED300/NW PSD NB GM	-10% / +10%	(0.386, 0.384) SDCM<5
911401534945	BY698P G5 LED300/CW PSD WB GM	-10% / +10%	(0.317, 0.338) SDCM<5
911401535045	BY698P G5 LED300/CW PSD NB GM	-10% / +10%	(0.317, 0.338) SDCM<5
911401535145	BY698P G5 LED200/840 PSD WB CAU	-10% / +10%	(0.386, 0.384) SDCM<5
911401535245	BY698P G5 LED250/840 PSD WB CAU	-10% / +10%	(0.386, 0.384) SDCM<5
911401535445	BY698P G5 LED300/840 PSD WB CAU	-10% / +10%	(0.386, 0.384) SDCM<5
911401535545	BY698P G5 LED105/NW PSU WB LA	-10% / +10%	(0.386, 0.384) SDCM<5
911401535645	BY698P G5 LED105/CW PSU WB LA	-10% / +10%	(0.317, 0.338) SDCM<5
911401535745	BY698P G5 LED150/NW PSU WB LA	-10% / +10%	(0.386, 0.384) SDCM<5
911401535845	BY698P G5 LED150/CW PSU WB LA	-10% / +10%	(0.317, 0.338) SDCM<5
911401535945	BY698P G5 LED200/NW PSU WB LA	-10% / +10%	(0.386, 0.384) SDCM<5
911401536045	BY698P G5 LED200/NW PSU NB LA	-10% / +10%	(0.386, 0.384) SDCM<5

Order Code	Full Product Name	Luminous flux tolerance	Initial chromaticity
911401536145	BY698P G5 LED200/CW PSU WB LA	-10% / +10%	(0.317, 0.338) SDCM<5
911401536245	BY698P G5 LED200/CW PSU NB LA	-10% / +10%	(0.317, 0.338) SDCM<5
911401536345	BY698P G5 LED250/NW PSU WB LA	-10% / +10%	(0.386, 0.384) SDCM<5
911401536445	BY698P G5 LED250/NW PSU NB LA	-10% / +10%	(0.386, 0.384) SDCM<5
911401536545	BY698P G5 LED250/CW PSU WB LA	-10% / +10%	(0.317, 0.338) SDCM<5
911401536645	BY698P G5 LED250/CW PSU NB LA	-10% / +10%	(0.317, 0.338) SDCM<5
911401536745	BY698P G5 LED300/NW PSU WB LA	-10% / +10%	(0.386, 0.384) SDCM<5
911401536845	BY698P G5 LED300/NW PSU NB LA	-10% / +10%	(0.386, 0.384) SDCM<5
911401536945	BY698P G5 LED300/CW PSU WB LA	-10% / +10%	(0.317, 0.338) SDCM<5
911401537045	BY698P G5 LED300/CW PSU NB LA	-10% / +10%	(0.317, 0.338) SDCM<5
911401537145	BY698P G5 LED105/NW PSD WB LA	-10% / +10%	(0.386, 0.384) SDCM<5
911401537245	BY698P G5 LED105/CW PSD WB LA	-10% / +10%	(0.317, 0.338) SDCM<5
911401537345	BY698P G5 LED150/NW PSD WB LA	-10% / +10%	(0.386, 0.384) SDCM<5
911401537445	BY698P G5 LED150/CW PSD WB LA	-10% / +10%	(0.317, 0.338) SDCM<5
911401537545	BY698P G5 LED200/NW PSD WB LA	-10% / +10%	(0.386, 0.384) SDCM<5
911401537645	BY698P G5 LED200/NW PSD NB LA	-10% / +10%	(0.386, 0.384) SDCM<5
911401537745	BY698P G5 LED200/CW PSD WB LA	-10% / +10%	(0.317, 0.338) SDCM<5
911401537845	BY698P G5 LED200/CW PSD NB LA	-10% / +10%	(0.317, 0.338) SDCM<5
911401537945	BY698P G5 LED250/NW PSD WB LA	-10% / +10%	(0.386, 0.384) SDCM<5
911401538045	BY698P G5 LED250/NW PSD NB LA	-10% / +10%	(0.386, 0.384) SDCM<5
911401538145	BY698P G5 LED250/CW PSD WB LA	-10% / +10%	(0.317, 0.338) SDCM<5
911401538245	BY698P G5 LED250/CW PSD NB LA	-10% / +10%	(0.317, 0.338) SDCM<5
911401538345	BY698P G5 LED300/NW PSD WB LA	-10% / +10%	(0.386, 0.384) SDCM<5
911401538445	BY698P G5 LED300/NW PSD NB LA	-10% / +10%	(0.386, 0.384) SDCM<5
911401538545	BY698P G5 LED300/CW PSD WB LA	-10% / +10%	(0.317, 0.338) SDCM<5
911401538645	BY698P G5 LED300/CW PSD NB LA	-10% / +10%	(0.317, 0.338) SDCM<5
911401538745	BY698P G5 LED105/NW PSU WB GM L3m	-10% / +10%	(0.386, 0.384) SDCM<5
911401538845	BY698P G5 LED105/NW PSU NB GM L3m	-10% / +10%	(0.386, 0.384) SDCM<5
911401538945	BY698P G5 LED105/CW PSU WB GM L3m	-10% / +10%	(0.317, 0.338) SDCM<5
911401539045	BY698P G5 LED105/CW PSU NB GM L3m	-10% / +10%	(0.317, 0.338) SDCM<5
911401539145	BY698P G5 LED150/NW PSU WB GM L3m	-10% / +10%	(0.386, 0.384) SDCM<5
911401539245	BY698P G5 LED150/NW PSU NB GM L3m	-10% / +10%	(0.386, 0.384) SDCM<5
911401539345	BY698P G5 LED150/CW PSU WB GM L3m	-10% / +10%	(0.317, 0.338) SDCM<5
911401539445	BY698P G5 LED150/CW PSU NB GM L3m	-10% / +10%	(0.317, 0.338) SDCM<5
911401539545	BY698P G5 LED200/NW PSU WB GM L3m	-10% / +10%	(0.386, 0.384) SDCM<5
911401539645	BY698P G5 LED200/NW PSU NB GM L3m	-10% / +10%	(0.386, 0.384) SDCM<5
911401539745	BY698P G5 LED200/CW PSU WB GM L3m	-10% / +10%	(0.317, 0.338) SDCM<5
911401539845	BY698P G5 LED200/CW PSU NB GM L3m	-10% / +10%	(0.317, 0.338) SDCM<5
911401539945	BY698P G5 LED250/NW PSU WB GM L3m	-10% / +10%	(0.386, 0.384) SDCM<5
911401540045	BY698P G5 LED250/NW PSU NB GM L3m	-10% / +10%	(0.386, 0.384) SDCM<5
911401540145	BY698P G5 LED250/CW PSU WB GM L3m	-10% / +10%	(0.317, 0.338) SDCM<5
911401540245	BY698P G5 LED250/CW PSU NB GM L3m	-10% / +10%	(0.317, 0.338) SDCM<5

Order Code	Full Product Name	Luminous flux tolerance	Initial chromaticity
911401540345	BY698P G5 LED300/NW PSU WB GM L3m	-10% / +10%	(0.386, 0.384) SDCM<5
911401540445	BY698P G5 LED300/NW PSU NB GM L3m	-10% / +10%	(0.386, 0.384) SDCM<5
911401540545	BY698P G5 LED300/CW PSU WB GM L3m	-10% / +10%	(0.317, 0.338) SDCM<5
911401540645	BY698P G5 LED300/CW PSU NB GM L3m	-10% / +10%	(0.317, 0.338) SDCM<5
911401540745	BY690P LED105/NW PSU WB GC	-10% / +10%	-
911401540845	BY690P LED105/CW PSU WB GC	-10% / +10%	-
911401540945	BY690P LED150/NW PSU WB GC	-10% / +10%	-
911401541045	BY690P LED150/CW PSU WB GC	-10% / +10%	-
911401541145	BY690P LED200/NW PSU WB GC	-10% / +10%	-
911401541245	BY690P LED200/CW PSU WB GC	-10% / +10%	-
911401541345	BY690P LED250/NW PSU WB GC	-10% / +10%	-
911401541445	BY690P LED250/CW PSU WB GC	-10% / +10%	-
911401541545	BY690P LED300/NW PSU WB GC	-10% / +10%	-
911401541645	BY690P LED300/CW PSU WB GC	-10% / +10%	-
911401541745	BY690P LED105/NW PSU WB GM	-10% / +10%	-
911401541845	BY690P LED105/CW PSU WB GM	-10% / +10%	-
911401541945	BY690P LED150/NW PSU WB GM	-10% / +10%	-
911401542045	BY690P LED150/CW PSU WB GM	-10% / +10%	-
911401542145	BY690P LED200/NW PSU WB GM	-10% / +10%	-
911401542245	BY690P LED200/CW PSU WB GM	-10% / +10%	-
911401542345	BY690P LED250/NW PSU WB GM	-10% / +10%	-
911401542445	BY690P LED250/CW PSU WB GM	-10% / +10%	-
911401542545	BY690P LED300/NW PSU WB GM	-10% / +10%	-
911401542645	BY690P LED300/CW PSU WB GM	-10% / +10%	-
911401580944	BY698P G5 LED105/NW PSU WB TW	-10% / +10%	(0.386, 0.384) SDCM<5
911401581044	BY698P G5 LED105/NW PSU NB TW	-10% / +10%	(0.386, 0.384) SDCM<5
911401581144	BY698P G5 LED105/CW PSU WB TW	-10% / +10%	(0.317, 0.338) SDCM<5
911401581244	BY698P G5 LED105/CW PSU NB TW	-10% / +10%	(0.317, 0.338) SDCM<5
911401581344	BY698P G5 LED150/NW PSU WB TW	-10% / +10%	(0.386, 0.384) SDCM<5
911401581444	BY698P G5 LED150/NW PSU NB TW	-10% / +10%	(0.386, 0.384) SDCM<5
911401581544	BY698P G5 LED150/CW PSU WB TW	-10% / +10%	(0.317, 0.338) SDCM<5
911401581644	BY698P G5 LED150/CW PSU NB TW	-10% / +10%	(0.317, 0.338) SDCM<5
911401581744	BY698P G5 LED200/NW PSU WB TW	-10% / +10%	(0.386, 0.384) SDCM<5
911401581844	BY698P G5 LED200/NW PSU NB TW	-10% / +10%	(0.386, 0.384) SDCM<5
911401581944	BY698P G5 LED200/CW PSU WB TW	-10% / +10%	(0.317, 0.338) SDCM<5
911401582044	BY698P G5 LED200/CW PSU NB TW	-10% / +10%	(0.317, 0.338) SDCM<5
911401582144	BY698P G5 LED250/NW PSU WB TW	-10% / +10%	(0.386, 0.384) SDCM<5
911401582244	BY698P G5 LED250/NW PSU NB TW	-10% / +10%	(0.386, 0.384) SDCM<5
911401582344	BY698P G5 LED250/CW PSU WB TW	-10% / +10%	(0.317, 0.338) SDCM<5
911401582444	BY698P G5 LED250/CW PSU NB TW	-10% / +10%	(0.317, 0.338) SDCM<5
911401582544	BY698P G5 LED300/NW PSU WB TW	-10% / +10%	(0.386, 0.384) SDCM<5
911401582644	BY698P G5 LED300/NW PSU NB TW	-10% / +10%	(0.386, 0.384) SDCM<5

Order Code	Full Product Name	Luminous flux tolerance	Initial chromaticity
911401582744	BY698P G5 LED300/CW PSU WB TW	-10% / +10%	(0.317, 0.338) SDCM<5
911401582844	BY698P G5 LED300/CW PSU NB TW	-10% / +10%	(0.317, 0.338) SDCM<5
911401543245	BY698X G5 LED150/NW Connected WB GC	-10% / +10%	(0.386, 0.384) SDCM<5
911401543345	BY698X G5 LED150/CW Connected WB GC	-10% / +10%	(0.317, 0.338) SDCM<5
911401543445	BY698X G5 LED200/NW Connected WB GC	-10% / +10%	(0.386, 0.384) SDCM<5
911401543545	BY698X G5 LED200/CW Connected WB GC	-10% / +10%	(0.317, 0.338) SDCM<5
911401543645	BY698X G5 LED250/NW Connected WB GC	-10% / +10%	(0.386, 0.384) SDCM<5
911401543745	BY698X G5 LED250/CW Connected WB GC	-10% / +10%	(0.317, 0.338) SDCM<5
911401543845	BY698X G5 LED300/NW Connected WB GC	-10% / +10%	(0.386, 0.384) SDCM<5
911401543945	BY698X G5 LED300/NW Connected NB GC	-10% / +10%	(0.386, 0.384) SDCM<5
911401544045	BY698X G5 LED300/CW Connected WB GC	-10% / +10%	(0.317, 0.338) SDCM<5
911401544145	BY698X G5 LED300/CW Connected NB GC	-10% / +10%	(0.317, 0.338) SDCM<5
911401544245	BY698X G5 LED150/NW Connected WB GM	-10% / +10%	(0.386, 0.384) SDCM<5
911401544345	BY698X G5 LED150/NW Connected NB GM	-10% / +10%	(0.386, 0.384) SDCM<5
911401544445	BY698X G5 LED150/CW Connected WB GM	-10% / +10%	(0.317, 0.338) SDCM<5
911401544545	BY698X G5 LED150/CW Connected NB GM	-10% / +10%	(0.317, 0.338) SDCM<5
911401544645	BY698X G5 LED200/NW Connected WB GM	-10% / +10%	(0.386, 0.384) SDCM<5
911401544745	BY698X G5 LED200/NW Connected NB GM	-10% / +10%	(0.386, 0.384) SDCM<5
911401544845	BY698X G5 LED200/CW Connected WB GM	-10% / +10%	(0.317, 0.338) SDCM<5
911401544945	BY698X G5 LED200/CW Connected NB GM	-10% / +10%	(0.317, 0.338) SDCM<5
911401545045	BY698X G5 LED250/NW Connected WB GM	-10% / +10%	(0.386, 0.384) SDCM<5
911401545145	BY698X G5 LED250/NW Connected NB GM	-10% / +10%	(0.386, 0.384) SDCM<5
911401545245	BY698X G5 LED250/CW Connected WB GM	-10% / +10%	(0.317, 0.338) SDCM<5
911401545345	BY698X G5 LED250/CW Connected NB GM	-10% / +10%	(0.317, 0.338) SDCM<5
911401545445	BY698X G5 LED300/NW Connected WB GM	-10% / +10%	(0.386, 0.384) SDCM<5
911401545545	BY698X G5 LED300/NW Connected NB GM	-10% / +10%	(0.386, 0.384) SDCM<5
911401545645	BY698X G5 LED300/CW Connected WB GM	-10% / +10%	(0.317, 0.338) SDCM<5
911401545745	BY698X G5 LED300/CW Connected NB GM	-10% / +10%	(0.317, 0.338) SDCM<5
911401545845	BY698X G5 LED200/840 Connected WB CAU	-10% / +10%	(0.386, 0.384) SDCM<5
911401545945	BY698X G5 LED250/840 Connected WB CAU	-10% / +10%	(0.386, 0.384) SDCM<5
911401546045	BY698X G5 LED300/840 Connected WB CAU	-10% / +10%	(0.386, 0.384) SDCM<5
911401546145	BY698X G5 LED150/NW Connected WB LA	-10% / +10%	(0.386, 0.384) SDCM<5
911401546245	BY698X G5 LED150/CW Connected WB LA	-10% / +10%	(0.317, 0.338) SDCM<5
911401546345	BY698X G5 LED200/NW Connected WB LA	-10% / +10%	(0.386, 0.384) SDCM<5
911401546445	BY698X G5 LED200/NW Connected NB LA	-10% / +10%	(0.386, 0.384) SDCM<5
911401546545	BY698X G5 LED200/CW Connected WB LA	-10% / +10%	(0.317, 0.338) SDCM<5
911401546645	BY698X G5 LED200/CW Connected NB LA	-10% / +10%	(0.317, 0.338) SDCM<5
911401546745	BY698X G5 LED250/NW Connected WB LA	-10% / +10%	(0.386, 0.384) SDCM<5
911401546845	BY698X G5 LED250/NW Connected NB LA	-10% / +10%	(0.386, 0.384) SDCM<5
911401546945	BY698X G5 LED250/CW Connected WB LA	-10% / +10%	(0.317, 0.338) SDCM<5
911401547045	BY698X G5 LED250/CW Connected NB LA	-10% / +10%	(0.317, 0.338) SDCM<5
911401547145	BY698X G5 LED300/NW Connected WB LA	-10% / +10%	(0.386, 0.384) SDCM<5

Order Code	Full Product Name	Luminous flux tolerance	Initial chromaticity
911401547245	BY698X G5 LED300/NW Connected NB LA	-10% / +10%	(0.386, 0.384) SDCM<5
911401547345	BY698X G5 LED300/CW Connected WB LA	-10% / +10%	(0.317, 0.338) SDCM<5
911401547445	BY698X G5 LED300/CW Connected NB LA	-10% / +10%	(0.317, 0.338) SDCM<5
911401547545	BY698X G5 LED105/NW L1W MW WB GM	+/-10%	(0.386, 0.384) SDCM<5
911401547645	BY698X G5 LED105/CW L1W MW WB GM	+/-10%	(0.317, 0.338) SDCM<5
911401547745	BY698X G5 LED150/NW L1W MW WB GM	+/-10%	(0.386, 0.384) SDCM<5
911401547845	BY698X G5 LED150/CW L1W MW WB GM	+/-10%	(0.317, 0.338) SDCM<5
911401547945	BY698X G5 LED200/NW L1W MW WB GM	+/-10%	(0.386, 0.384) SDCM<5
911401548045	BY698X G5 LED200/CW L1W MW WB GM	+/-10%	(0.317, 0.338) SDCM<5
911401548145	BY698X G5 LED250/NW L1W MW WB GM	+/-10%	(0.386, 0.384) SDCM<5
911401548245	BY698X G5 LED250/CW L1W MW WB GM	+/-10%	(0.317, 0.338) SDCM<5
911401548345	BY698X G5 LED300/NW L1W MW WB GM	+/-10%	(0.386, 0.384) SDCM<5
911401548445	BY698X G5 LED300/CW L1W MW WB GM	+/-10%	(0.317, 0.338) SDCM<5
911401548545	BY698X G5 LED105/NW L1W MW WB GM L3m	+/-10%	(0.386, 0.384) SDCM<5
911401548645	BY698X G5 LED105/CW L1W MW WB GM L3m	+/-10%	(0.317, 0.338) SDCM<5
911401548745	BY698X G5 LED150/NW L1W MW WB GM L3m	+/-10%	(0.386, 0.384) SDCM<5
911401548845	BY698X G5 LED150/CW L1W MW WB GM L3m	+/-10%	(0.317, 0.338) SDCM<5
911401548945	BY698X G5 LED200/NW L1W MW WB GM L3m	+/-10%	(0.386, 0.384) SDCM<5
911401549045	BY698X G5 LED200/CW L1W MW WB GM L3m	+/-10%	(0.317, 0.338) SDCM<5
911401549145	BY698X G5 LED250/NW L1W MW WB GM L3m	+/-10%	(0.386, 0.384) SDCM<5
911401549245	BY698X G5 LED250/CW L1W MW WB GM L3m	+/-10%	(0.317, 0.338) SDCM<5
911401549345	BY698X G5 LED300/NW L1W MW WB GM L3m	+/-10%	(0.386, 0.384) SDCM<5
911401549445	BY698X G5 LED300/CW L1W MW WB GM L3m	+/-10%	(0.317, 0.338) SDCM<5

© 2026 Signify Holding. All rights reserved. The information provided herein is subject to change, without notice. Signify does not give any representation or warranty as to the accuracy or completeness of the information included herein and shall not be liable for any action in reliance thereon. The information presented in this document is not intended as any commercial offer and does not form part of any quotation or contract, unless otherwise agreed by Signify. Philips and the Philips Shield Emblem are registered trademarks of Koninklijke Philips N.V.