PHILIPS

SM155C 16_27S/ 840_50_65 PSU PI3 L602

911401826289

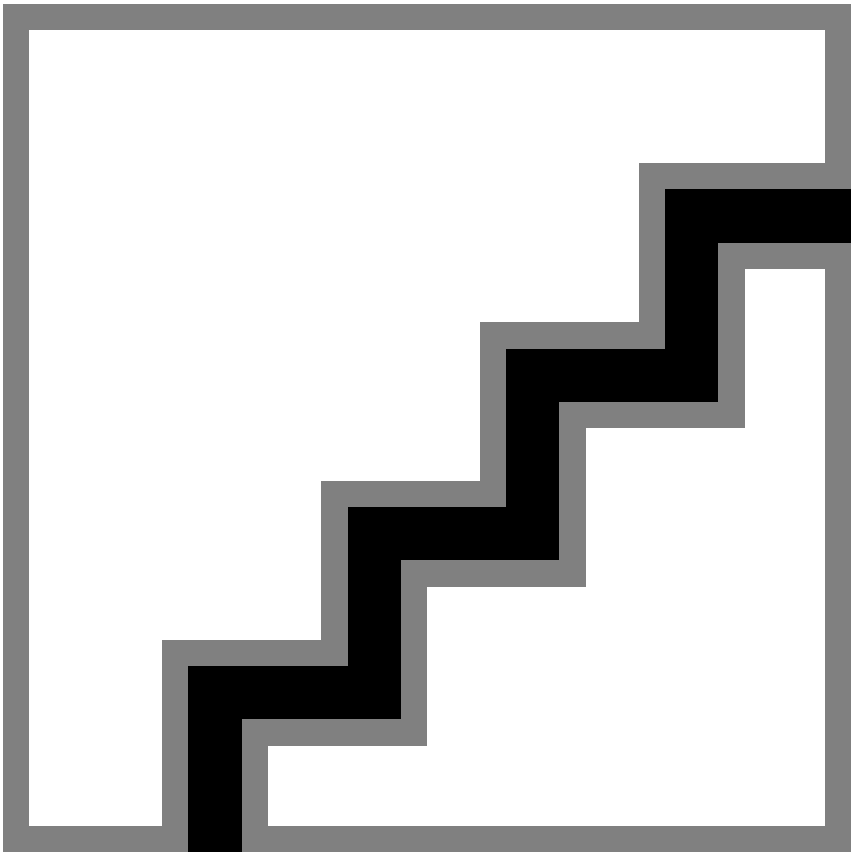

SM155, 12 W, 20 W, 1600 lm, 2700 lm, Selectable, depends on driver (1-10V, DALI...)

Philips SmartBright SM155 is an excellent product to fit different interior spaces, for instance, schools, hospitals, indoor corridors. SM155 provides max 150lm/w which leads to higher energy saving. Thanks to its All-in design, you can switch between different CCTs and different lumen output in the same luminaire to suit your exact needs. IP44 design makes SM155 fit into indoor high circulation area too, such as parking area.

General Information

Light source engine type	LED

Light Technical

Luminous Flux	1,600 lm
Correlated Color Temperature (Nom)	Selectable
Luminous Efficacy (rated) (Nom)	133 lm/W
Color rendering index (CRI)	80
Light source color	Multi Color Temperature
Unified glare rating CEN	25

Operating and Electrical

Input Voltage	220-240 V
Line Frequency	50 or 60 Hz
Inrush current	14.8 A
Power Consumption	12 W
Power Factor (Fraction)	0.9
Number of products on MCB of 16 A type B	70
Protection class IEC	Safety class I

Controls and Dimming

Dimmable	Yes
Control interface	depends on driver (1-10V, DALI...)

Mechanical and Housing

Housing Material	Steel
Optical cover material	Polycarbonate
Housing Color	White RAL 9003
Optical cover finish	Opal
Overall length	602 mm
Overall width	163 mm
Overall height	67 mm
Dimensions (Height x Width x Depth)	67 x 163 x 602 mm
Ingress protection code	IP44 [Wire-protected, splash-proof]
Mech. impact protection code	IK06 [1 J]

Dimensional drawing

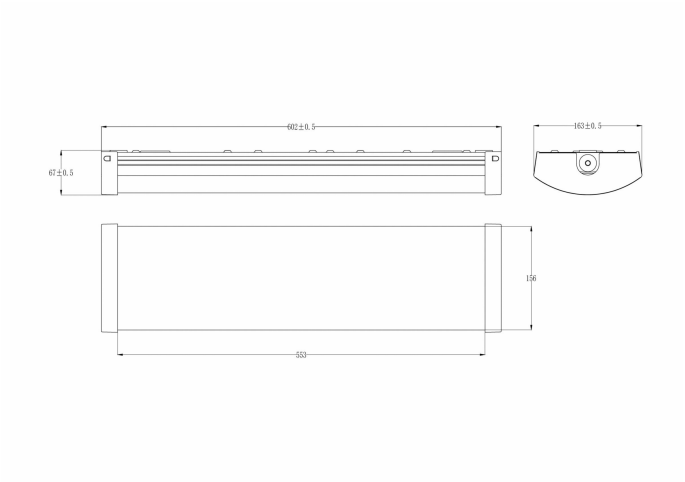

Optical cover type	Polycarbonate Diffuser
Net Weight (Piece)	1.450 kg

Approval and Application

CE mark	Yes
Ambient temperature range	-20 to +45 °C

Initial Performance (IEC Compliant)

Luminous flux tolerance	+/-10%
Power consumption tolerance	+/-10%

Product Data

Order product name	SM155C 16_27S/840_50_65 PSU PI3 L602
Full product name	SM155C 16_27S/840_50_65 PSU PI3 L602
Full product code	872110372113699
Order code	911401826289
Material Nr. (12NC)	911401826289
Numerator - Quantity Per Pack	1
EAN/UPC - Product/Case	8721103721136
Numerator - Packs per outer box	4
EAN/UPC - Case	8721103721167

Related Documents

Documents and certificates	Document Name	Download
Installation Instructions	FastSet-SM155C-MI.pdf	Download

Photometry and lighting design	Document Name	Download
IES File	SM155C-16-27S-840-50-65-PSU-PI3-L602.ies	Download

© 2026 Signify Holding. All rights reserved. The information provided herein is subject to change, without notice. Signify does not give any representation or warranty as to the accuracy or completeness of the information included herein and shall not be liable for any action in reliance thereon. The information presented in this document is not intended as any commercial offer and does not form part of any quotation or contract, unless otherwise agreed by Signify. Philips and the Philips Shield Emblem are registered trademarks of Koninklijke Philips N.V.