PHILIPS

ST271T LED20/840 PSU-E MB 1C WH

919515811221



EcoAccent - Enhance the Retail Experience

EcoAccent is the LED solution for shop targeting energy savings. With a system efficacy of 95 lm/W in average, delivering more than 40% energy efficient compared to CDM solution. EcoAccent helps save energy and at the same time provides excellent lighting for retail environment thus enhancing the retail experience. The option of different light distribution for Accent light and varity of lumen packs and colour temperatures makes it an ideal solution for retail lighting.

Warnings and Safety

- To be used in Indoor Environment only

General Information

Driver included	Yes
Light source engine type	LED
Warranty period	3 years

Light Technical

Luminous Flux	2,000 lm
Correlated Color Temperature (Nom)	4000 K
Luminous Efficacy (rated) (Nom)	100 lm/W
Color rendering index (CRI)	>80
Beam angle of light source	24 degree(s)
Light source color	840 neutral white
Optic type	Beam angle 12 to 36°
Luminaire light beam spread	24°

Operating and Electrical

Input Voltage	240 V
Line Frequency	50 Hz
Power Consumption	22 W
Power Factor (Fraction)	0.9
Protection class IEC	Safety class II
Surge Protection (Common/ Differential)	2.5 kV kV

Controls and Dimming

Dimmable	No
Control interface	-

Mechanical and Housing

Housing Material	Aluminum Alloy
Optic material	Aluminum and polycarbonate
Optical cover material	Polycarbonate
Housing Color	White
Mounting device	Mounting bracket adjustable
Overall width	163 mm
Overall height	225 mm
Overall diameter	85 mm
Material	Aluminum
Ingress protection code	IP20 [Finger-protected]
Mech. impact protection code	IK02 [0.2 J standard]
Optical cover type	Aluminum and polycarbonate
Net Weight (Piece)	0.750 kg

Dimensional drawing

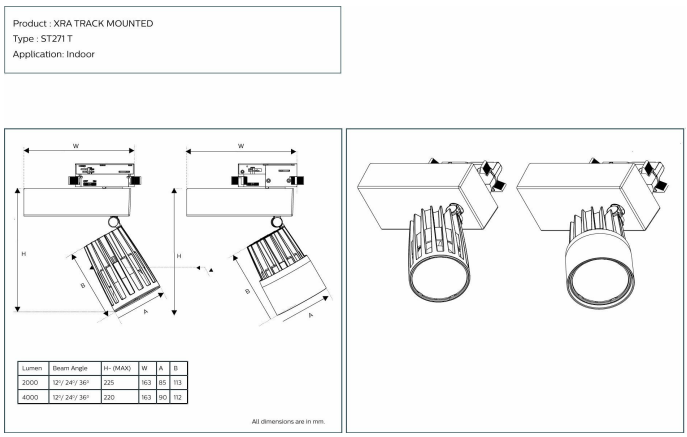

Approval and Application

Flammability mark	For mounting on normally flammable surfaces
Ambient temperature range	0 to +45 °C

Initial Performance (IEC Compliant)

Power consumption tolerance	+/-10%

Over Time Performance (IEC Compliant)

Median useful life L70B50	40,000 hour(s)

Product Data

Order product name	ST271T LED20/840 PSU-E MB 1C WH
Full product name	ST271T LED20/840 PSU-E MB 1C WH
Order code	919515811221
Material Nr. (12NC)	919515811221
Numerator - Quantity Per Pack	1
Numerator - Packs per outer box	1

© 2026 Signify Holding. All rights reserved. The information provided herein is subject to change, without notice. Signify does not give any representation or warranty as to the accuracy or completeness of the information included herein and shall not be liable for any action in reliance thereon. The information presented in this document is not intended as any commercial offer and does not form part of any quotation or contract, unless otherwise agreed by Signify. Philips and the Philips Shield Emblem are registered trademarks of Koninklijke Philips N.V.