PHILIPS

DN 394B LED 16S-4000 PSD WH

919515810469



Dimmable high Performance LED downlight for indoors

GreenPerform is a high performance Led downlight family suitable for use in a series of Lighting applications in Office, Retail and General Area Lighting. Available in a wide variety of lumen packs, color temp and options of all type of dimming(Phase Cut/Analogue/DALI), GreenPerform becomes the perfect solution for downlight applications for professional users.

Warnings and Safety

- Meant for use in Indoor environment only

General Information

Driver included	Yes
Light source engine type	LED
Warranty period	3 years

Light Technical

Luminous Flux	1,600 lm
Correlated Color Temperature (Nom)	4000 K
Luminous Efficacy (rated) (Nom)	100 lm/W
Color rendering index (CRI)	>80
Beam angle of light source	120 degree(s)
Light source color	840 neutral white
Optic type	-
Luminaire light beam spread	120°

Operating and Electrical

Input Voltage	220-240 V
Line Frequency	50 Hz
Power Consumption	15.5 W
Power Factor (Fraction)	0.9
Protection class IEC	Safety class I
Surge Protection (Common/ Differential)	2.5 kV kV

Controls and Dimming

Dimmable	Yes
Control interface	DALI

Mechanical and Housing

Housing Material	Aluminum Alloy
Optic material	Polycarbonate
Optical cover material	Polycarbonate
Housing Color	White
Mounting device	Spring clip for recess mounting
Overall height	80 mm
Overall diameter	185 mm
Material	Aluminum
Ingress protection code	IP20 [Finger-protected]
Mech. impact protection code	IK02 [0.2 J standard]

Dimensional drawing

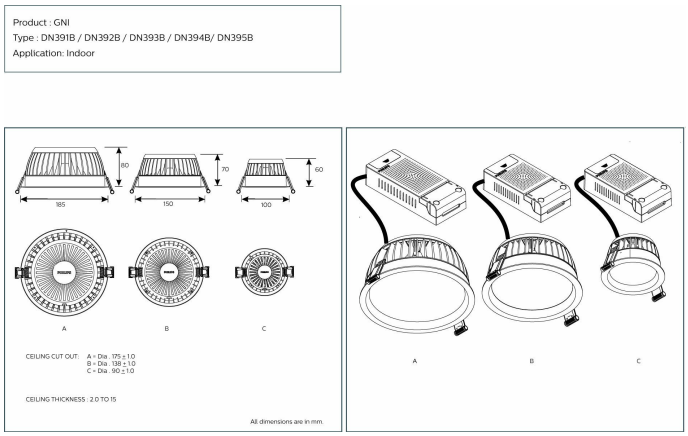

Optical cover type	Polycarbonate
Net Weight (Piece)	1.100 kg

Approval and Application

Flammability mark	For mounting on normally flammable surfaces
Ambient temperature range	0 to +45 °C

Initial Performance (IEC Compliant)

Power consumption tolerance	+/-10%

Over Time Performance (IEC Compliant)

Median useful life L70B50	40,000 hour(s)

Product Data

Order product name	DN 394B LED 16S-4000 PSD WH
Full product name	DN 394B LED 16S-4000 PSD WH
Order code	919515810469
Material Nr. (12NC)	919515810469
Numerator - Quantity Per Pack	1
Numerator - Packs per outer box	8

© 2026 Signify Holding. All rights reserved. The information provided herein is subject to change, without notice. Signify does not give any representation or warranty as to the accuracy or completeness of the information included herein and shall not be liable for any action in reliance thereon. The information presented in this document is not intended as any commercial offer and does not form part of any quotation or contract, unless otherwise agreed by Signify. Philips and the Philips Shield Emblem are registered trademarks of Koninklijke Philips N.V.