PHILIPS

Lighting



More Reliable, More Professional. The most affordable LED solution for office.

SmartBright Direct-lit Panel RC048

The Philips SmartBright range is comprised of a selection of essential LED luminaires that come with Philips high levels of quality at a competitive price. Reliable, energy efficient and affordable lighting solutions that you can count on to deliver what they promise. Philips SmartBright Panels are our most affordable LED solution. The complete product family is available in multiple mounting types, product dimensions and lumen options to suit the widest range of applications. And thanks to the direct-lit structure, SmartBright panels deliver both higher system efficacy and excellent lighting uniformity. The essential range of LED panels for everyday installations.

Benefits

- No risks, trusted performance
- Philips quality and reliability
- Comfortable light
- Usage flexibility

Features

- 4000 lumen choice
- Long lifetime of 30,000 hours @L70
- Energy efficient 105 lm/W
- Flicker free, RG0, CRI 80
- Suits for recessed, surface and suspension application

SmartBright Direct-lit Panel RC048

Application

- Offices
- Hospitals and Care Centers
- Retail

Versions



RC048 G3 standard -30120



RC048 G3 standard -6060



RC048 G3 standard -30120-MR

Dimensional drawing

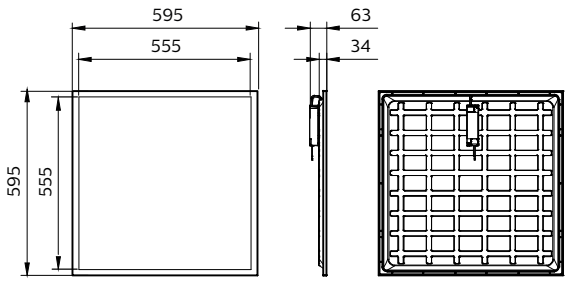

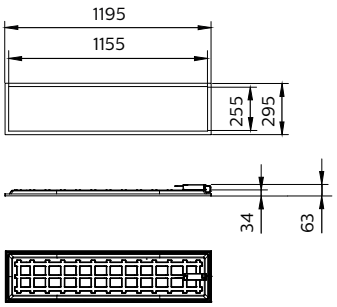

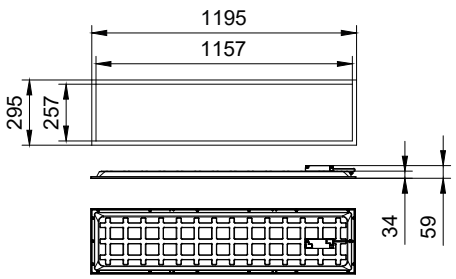

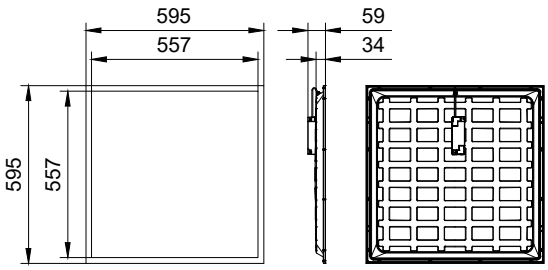

SmartBright Direct-lit Panel RC048

Product details



RC048 G3 Back -30120

RC048 G3 Front-6060-MR



RC048 G3 Back-6060-MR



RC048 G3 Back-6060



RC048 G3 Driver



RC048 G3 Back-30120-MR

RC048 G3 Front-30120-MR

SmartBright Direct-lit Panel RC048

Light Technical	
Color rendering index (CRI)	≥80
Luminous Efficacy (rated) (Nom)	105 lm/W
Luminous Flux	4,000 lm
Operating and Electrical	
Protection class IEC	Safety class II
Input Voltage	220 to 240 V
Line Frequency	50 or 60 Hz
Power Consumption	38 W
Controls and Dimming	
Dimmable	No
Mechanical and Housing	
Optical cover type	Polymethyl methacrylate lens
Housing Color	White RAL 9003
Mech. impact protection code	IK02
Ingress protection code	IP20
Approval and Application	
Ambient temperature range	-10 °C to 40 °C
CE mark	No

Light Technical

Order Code	Full Product Name	Correlated Color Temperature (Nom)
911401898787	RC048B LED40S/840 PSU W30L120 GM G3	4000 K
911401898887	RC048B LED40S/865 PSU W30L120 GM G3	6500 K
911401898587	RC048B LED40S/840 PSU W60L60 GM G3	4000 K
911401898687	RC048B LED40S/865 PSU W60L60 GM G3	6500 K
911401899387	RC048B LED40S/840 PSU W60L60 PCV MR	4000 K
911401899487	RC048B LED40S/865 PSU W60L60 PCV MR	6500 K
911401899587	RC048B LED40S/840 PSU W30L120 PCV MR	4000 K
911401899687	RC048B LED40S/865 PSU W30L120 PCV MR	6500 K

Initial Performance (IEC Compliant)

Order Code	Full Product Name	Luminous flux tolerance
911401898787	RC048B LED40S/840 PSU W30L120 GM G3	-10% / +10%
911401898887	RC048B LED40S/865 PSU W30L120 GM G3	-10% / +10%
911401898587	RC048B LED40S/840 PSU W60L60 GM G3	-10% / +10%
911401898687	RC048B LED40S/865 PSU W60L60 GM G3	-10% / +10%

Order Code	Full Product Name	Luminous flux tolerance
911401899387	RC048B LED40S/840 PSU W60L60 PCV MR	-10%,+15%
911401899487	RC048B LED40S/865 PSU W60L60 PCV MR	-10%,+15%
911401899587	RC048B LED40S/840 PSU W30L120 PCV MR	-10%,+15%
911401899687	RC048B LED40S/865 PSU W30L120 PCV MR	-10%,+15%

© 2025 Signify Holding All rights reserved. Signify does not give any representation or warranty as to the accuracy or completeness of the information included herein and shall not be liable for any action in reliance thereon. The information presented in this document is not intended as any commercial offer and does not form part of any quotation or contract, unless otherwise agreed by Signify. All trademarks are owned by Signify Holding or their respective owners.