PHILIPS

Smartbright Dual select Batten BN131C

9019162

Trusted Performance, everyday.

New Philips Dual Select batten offers exceptional value. It is Perfect for your everyday lighting installations. Available in 2 standard sizes, it has option of 3 CCT selection and 2 Lumen output selection to provide flexibility to customer and reduce customer stocking requirements.

Benefits

- Tri-CCT, Dual wattage selectable
- 50K hours life
- 5 Years warranty

Applications

- Offices
- Parking Garages
- Residential

Features

- Selectable dual power output to suit multiple application environments.
- 3 selectable colour temperatures to suit specific customer need
- Energy efficient with long service life. (50 000 hours - L70)
- 5 year warranty.
- Available in 600mm/1200mm/1500 mm size

Versions

BN131 L1200

BN131 L600

Dimensional drawing

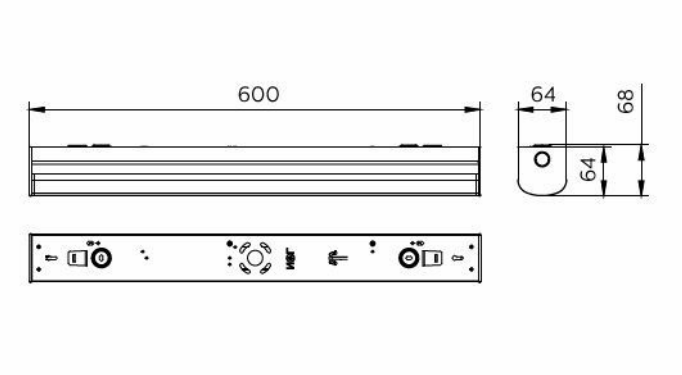

BN131 L600

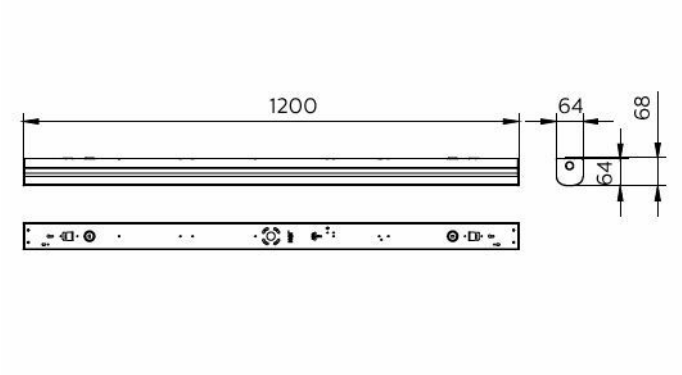

BN131 L1200

Light Technical

Luminous Efficacy (rated) (Nom)	110 lm/W
Color rendering index (CRI)	>80

Operating and Electrical

Input Voltage	220 to 240 V
Line Frequency	50 or 60 Hz
Protection class IEC	Safety class I

Controls and Dimming

Dimmable	No

Mechanical and Housing

Housing Color	White RAL9016
Ingress protection code	IP20 [Finger-protected]
Mech. impact protection code	IK04 [0.5 J standard plus]
Optical cover type	-

Approval and Application

Flammability mark	For mounting on normally flammable surfaces
CE mark	No
Ambient temperature range	-20 to +40 °C

Initial Performance (IEC Compliant)

Luminous flux tolerance	+/-10%
Initial chromaticity	4000K (0.3825 , 0.3798), 6500K (0.3130 Y 0.3290),SDCM≤5

Light Technical

Order Code	Full Product Name	Luminous Flux	Correlated Color Temperature (Nom)
911401801484	BN131C LED SWT/SCCT L1200 PSU Slim	4,100 lm	4000 K 5000 K 6500 K
911401801384	BN131C LED SWT/SCCT L600 PSU Slim	2,000 lm	4000 K 5000 K 6500 K

Operating and Electrical

Order Code	Full Product Name	Power Consumption
911401801484	BN131C LED SWT/SCCT L1200 PSU Slim	17 W 35 W
911401801384	BN131C LED SWT/SCCT L600 PSU Slim	9 W 18 W

© 2026 Signify Holding. All rights reserved. The information provided herein is subject to change, without notice. Signify does not give any representation or warranty as to the accuracy or completeness of the information included herein and shall not be liable for any action in reliance thereon. The information presented in this document is not intended as any commercial offer and does not form part of any quotation or contract, unless otherwise agreed by Signify. Philips and the Philips Shield Emblem are registered trademarks of Koninklijke Philips N.V.