PHILIPS

**ST033T LED17/840 20W 110-240V I MB BK TW**

911401893382



# Essential Smartbright Projector (Wide Voltage) Gen 2, 20 W, 1700 lm, 4000 K

Essential SmartBright Projector ST033T is a value for money product designed for Mass market trade. It is designed to replace halogen and CDM-standard-based projectors for retail and hospitality applications. This track based luminaire supports retailers to let their products stand out, or highlight certain objects. The clean and contemporary design with integrated driver makes the Essential SmartBright Projector relevant to many applications. The choice of 2 colors in White and Black helps the Retailer to choose products best suited to blend into the Store Environment. Compared to it's predecessor, it is not only cost effective, but also a more sleek and lighter product design.

## General Information

| | |
|---|---|
| Light source engine type | LED |
| Value ladder | Value |

## Light Technical

| | |
|---|---|
| Luminous Flux | 1,700 lm |
| Correlated Color Temperature (Nom) | 4000 K |
| Luminous Efficacy (rated) (Nom) | 85 lm/W |
| Color rendering index (CRI) | >80 |
| Light source color | 840 neutral white |

## Operating and Electrical

| | |
|---|---|
| Input Voltage | 110 to 240 V |
| Line Frequency | 50 or 60 Hz |
| Inrush current | 8.2 A |
| Power Consumption | 20 W |
| Power Factor (Fraction) | 0.9 |
| Number of products on MCB of 16 A type B | 73 |
| Protection class IEC | Safety class II |

## Controls and Dimming

| | |
|---|---|
| Dimmable | No |
| Control interface | - |

## Mechanical and Housing

| | |
|---|---|
| Housing Material | Aluminum |
| Optical cover material | Polycarbonate |
| Housing Color | Black |
| Optical cover finish | Textured |
| Overall length | 215 mm |
| Overall width | 155 mm |
| Overall height | 65 mm |
| Overall diameter | 65 mm |
| Dimensions (Height x Width x Depth) | 65 x 155 x 215 mm |
| Ingress protection code | IP20 [Finger-protected] |
| Mech. impact protection code | IK03 [0.3 J] |
| Optical cover type | Collimator with focus angle 24° |
| Net Weight (Piece) | 0.279 kg |

## Approval and Application

| | |
|---|---|
| Flammability mark | For mounting on normally flammable surfaces |
| CE mark | No |
| Ambient temperature range | -20 to +45 °C |

## Initial Performance (IEC Compliant)

| | |
|---|---|
| Luminous flux tolerance | +/-10% |
| Initial chromaticity | (0.3818, 0.3797) SDCM <5 |
| Power consumption tolerance | +/-10% |

## Product Data

| | |
|---|---|
| Order product name | ST033T LED17/840 20W 110-240V I MB BK TW |
| Full product name | ST033T LED17/840 20W 110-240V I MB BK TW |
| Full product code | 871951454616599 |
| Order code | 911401893382 |
| Material Nr. (12NC) | 911401893382 |
| Numerator - Quantity Per Pack | 1 |
| EAN/UPC - Product/Case | 8719514546165 |
| Numerator - Packs per outer box | 30 |
| EAN/UPC - Case | 8719514546325 |

## Dimensional drawing

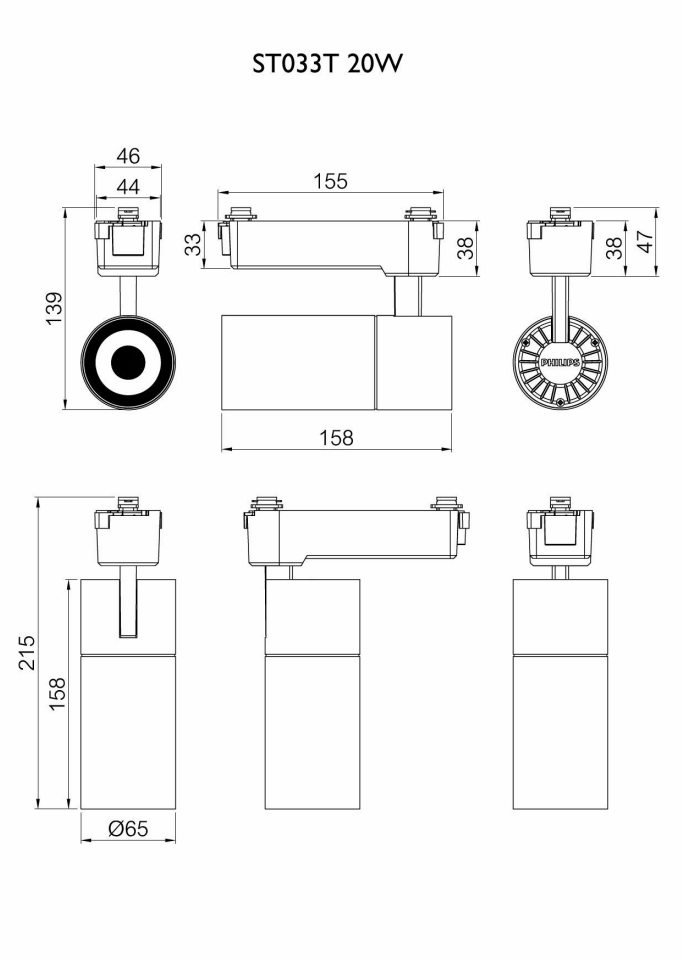


## Related Documents

| Documents and certificates | Document Name | Download |
|---|---|---|
| Installation Instructions | INI_TW ST033T.pdf | Download |

| Photometry and lighting design | Document Name | Download |
|---|---|---|
| IES File | 8651353 20W 4000K.IES | Download |

© 2026 Signify Holding. All rights reserved. The information provided herein is subject to change, without notice. Signify does not give any representation or warranty as to the accuracy or completeness of the information included herein and shall not be liable for any action in reliance thereon. The information presented in this document is not intended as any commercial offer and does not form part of any quotation or contract, unless otherwise agreed by Signify. Philips and the Philips Shield Emblem are registered trademarks of Koninklijke Philips N.V.