PHILIPS

Standard Candle B35 clear

ICNSTDB



Product Description

Flame-shaped bulb with clear glass and vacuum- or gas-filled bulb with B- or E-base

Benefits

- At their best in decorative glass chandeliers and wall brackets with clear or textured glass bowls
- Brilliant, visible filament adds small points of brightness for an enriched lighting effect

Applications

- Home use in living and dining rooms, bedrooms, halls and studies
- Hotel lounges, restaurants, bedrooms, halls, conference rooms and foyers
- Clubs and social areas
- Ballrooms
- Shops and boutiques
- Churches

Features

- Slender, crystal-clear lamps designed for sparkling highlights
- Creates a classic sparkling atmosphere

Versions



LPPR1_ICANESTD_E14_B35_CL.JPG



LPPR ICANBSTD B22 B35 CL

Dimensional drawing

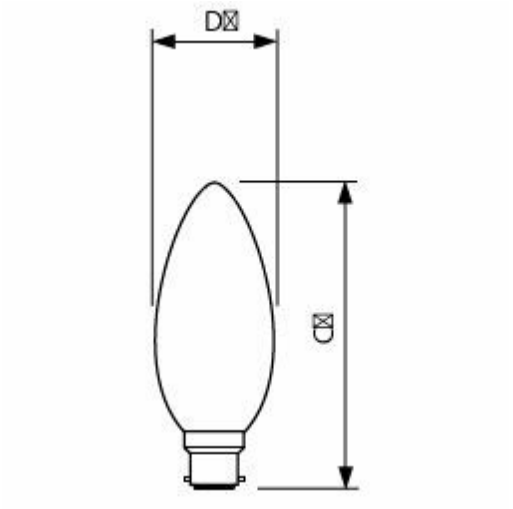

Product	D	C (max)
230V 25W CANDLE BC CLEAR	35 mm	94.5 mm

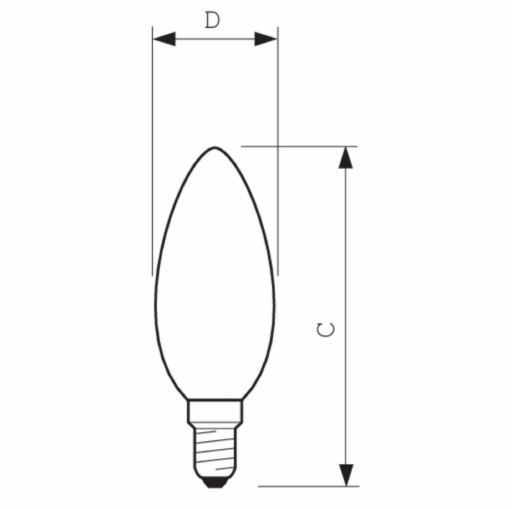

Product	D	C (max)
Stan 40W E14 230V B35 CL U 1CT/6X50CT	35 mm	100 mm
Stan 60W E14 230V B35 CL 1CT/10X10F	35 mm	100 mm

General Information

Operating Position	UNIVERSAL [Any or Universal (U)]
Nominal lifetime	1,000 hour(s)
Rated Lifetime (Hours)	1,000 hour(s)

Light Technical

Color rendering index (CRI)	100

Operating and Electrical

Voltage (Nom)	230 V

Controls and Dimming

Dimmable	Yes

Mechanical and Housing

Bulb Finish	Clear
Bulb Shape	B35

General Information

Order Code	Full Product Name	Cap-Base
926000003017	Stan 60W E14 230V B35 CL 1CT/10X10F	E14
926000205010	Stan 40W E14 230V B35 CL U 1CT/6X50CT	E14
921485544299	230V 25W CANDLE BC CLEAR	B22

Light Technical

Order Code	Full Product Name	Luminous Flux
926000003017	Stan 60W E14 230V B35 CL 1CT/10X10F	670 lm
926000205010	Stan 40W E14 230V B35 CL U 1CT/6X50CT	410 lm
921485544299	230V 25W CANDLE BC CLEAR	205 lm

Operating and Electrical

Order Code	Full Product Name	Power Consumption
926000003017	Stan 60W E14 230V B35 CL 1CT/10X10F	60 W
926000205010	Stan 40W E14 230V B35 CL U 1CT/6X50CT	40 W
921485544299	230V 25W CANDLE BC CLEAR	25 W

© 2026 Signify Holding. All rights reserved. The information provided herein is subject to change, without notice. Signify does not give any representation or warranty as to the accuracy or completeness of the information included herein and shall not be liable for any action in reliance thereon. The information presented in this document is not intended as any commercial offer and does not form part of any quotation or contract, unless otherwise agreed by Signify. Philips and the Philips Shield Emblem are registered trademarks of Koninklijke Philips N.V.