Signify

CityCharm Cone

BDS491



CityCharm: combining visual comfort and performance

The CityCharm range is designed for use in urban areas where comfortable lighting, ambience, and design play an important role. It offers three iconic, timeless designs: CityCharm cordoba (BDS490), CityCharm cone (BDS491), and CityCharm fluid (BDS492) along with a range of decorative and practical accessories. This enables you to create a lighting solution that carries the signature of your municipality, both by day and by night. Whether you specify cordoba, cone or fluid LED lights, CityCharm provides high visual comfort while maintaining excellent performance. It offers a choice of two innovative Lighting technologies: GentleBeam, which maximizes visual comfort, or ClearGuide (cordoba or cone), which optimizes vertical illumination and visual guidance. To personalize your CityCharm lighting solution further, decorative accessories for this range make it possible to define the volume of the bowl and change its appearance. A variety of dedicated brackets and masts are also available to

enable you to reshape your residential areas and city centers in the most elegant way imaginable.

Benefits

- Elegant, iconic range enhanced by dedicated poles and brackets to create distinctive styles
- Comfortable lighting with GentleBeam or ClearGuide technologies
- Multiple geometries for visual comfort in all urban spaces
- Excellent lighting performance, high-quality finishing
- Future-ready with Zhaga-D4i system ready (SR) top socket to connect with Interact controls
- Service tag for easy installation and maintenance

Applications

- Residential
- Footpaths and cycle lanes
- Parks and boulevards

Features

- Choice of luminaire shapes, color effects, poles and brackets
- Diffusing tools for visual comfort, colored inserts to enhance ambiance
- Wide range of lumen outputs and optics for maximum efficiency at all lighting levels
- Choice of color temperatures and color rendering for different ambiences: 2200K, 2700K, 3000K and 4000K
- Efficacy up to 144 lm/W
- Cordoba and fluid versions available with ULR < 1%
- Lifetime up to 100,000 hours @L96 B10
- 5-year standard warranty (option to extend up to 10 years)

Versions



CityCharm Cone with Clearguide and top Zhaga socket



CityCharm Cone with gentlebeam



CityCharm Cone with grey decorative bowl

Dimensional drawing

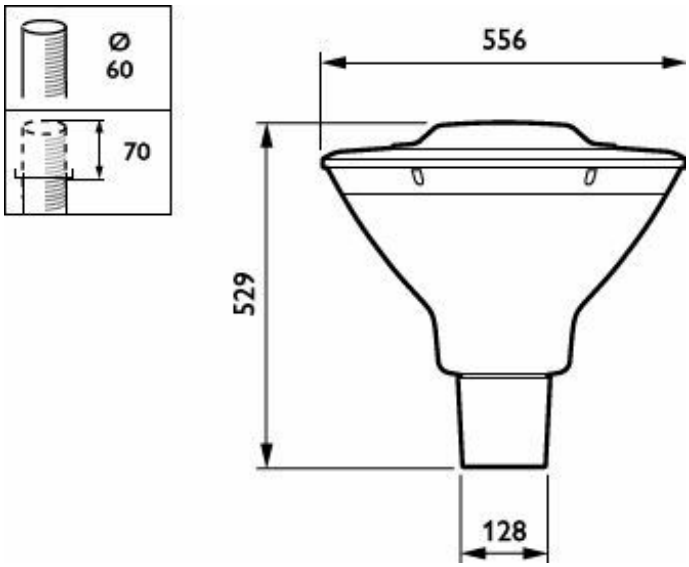

CityCharm Cone - LED module 7000 lm - LED - 830 warm white - Power supply unit regulating - 220 to 240 V - 50 to 60 Hz - Safety class I - Symmetrical - Polycarbonate bowl/cover - Gray - Luminaire surge protection level until 6 kV differential mode and 8 kV common mode - Cable 0.2 m without plug - Spigot for diameter 60 mm

Product details



CityCharm_Cordoba_Cone-BDS490_BDS491_DGR-DP02.tif



CityCharm Cone with Clearguide

General Information

Light source replaceable	Yes
Number of gear units	1 unit
Gear	EB [Electronic]
Driver included	Yes
Service tag	Yes

Light Technical

Number of light sources	15
Luminaire light beam spread	360°

Controls and Dimming

Dimmable	No
Maximum dim level	Not applicable

Mechanical and Housing

Housing Color	Gray
Ingress protection code	IP66 [Dust penetration-protected, jet-proof]
Mech. impact protection code	IK10 [20 J vandal-resistant]
Standard tilt angle posttop	0°
Standard tilt angle side entry	0°
Optical cover type	Polycarbonate bowl/cover

Approval and Application

Glow-wire test	Temperature 650 °C, duration 30 s
Flammability mark	-
CE mark	Yes

Over Time Performance (IEC Compliant)

Driver failure rate at 5000 h	0.05 %

Product Data

Product family code	BDS491 [CITYCHARM CONE]

General Information

Order Code	Full Product Name	Lamp family code
910505017432	BDS491 CG25-/730 II S GR 60	CG25
912300024684	BDS491 LED100-/740 I DM GRB DF-S GR CLO	LED100
912300024687	BDS491 LED70-/830 I S GRB GR 60	LED70
912300024693	BDS491 LED30-/830 II DM GRB GR 60	LED30

Light Technical

Order Code	Full Product Name	Upward light output ratio	Luminous Flux	Correlated Color Temperature (Nom)	Color rendering index (CRI)	Light source color	Optic type outdoor
910505017432	BDS491 CG25-/730 II S GR 60	0.03	2,117 lm	3000 K	70	730 warm white	Symmetrical
912300024684	BDS491 LED100-/740 I DM GRB DF-S GR CLO	0.0351	7,600 lm	4000 K	70	740 neutral white	Distribution medium
912300024687	BDS491 LED70-/830 I S GRB GR 60	0.0136	5,670 lm	3000 K	80	830 warm white	Symmetrical
912300024693	BDS491 LED30-/830 II DM GRB GR 60	0.03	2,400 lm	3000 K	80	830 warm white	Distribution medium

Operating and Electrical

Order Code	Full Product Name	Power Consumption	Surge Protection (Common/Differential)
910505017432	BDS491 CG25-/730 II S GR 60	22 W	Surge protection level until 6 kV differential mode and 8 kV common mode
912300024684	BDS491 LED100-/740 I DM GRB DF-S GR CLO	58 W	Surge protection level until 10 kV differential mode and 10 kV common mode
912300024687	BDS491 LED70-/830 I S GRB GR 60	53 W	Surge protection level until 6 kV differential mode and 8 kV common mode
912300024693	BDS491 LED30-/830 II DM GRB GR 60	23.5 W	Surge protection level until 6 kV differential mode and 8 kV common mode

Polar normal diagrams

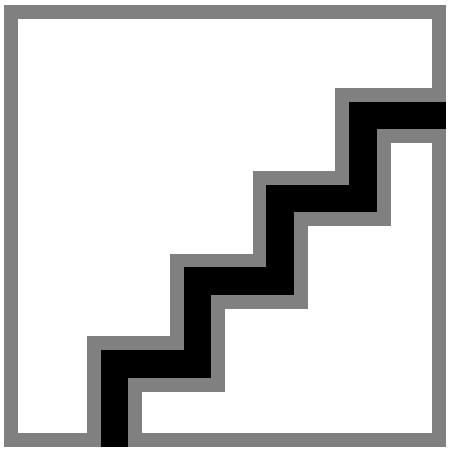

BDS491 CG25-/730 II S GR 60
910505017432

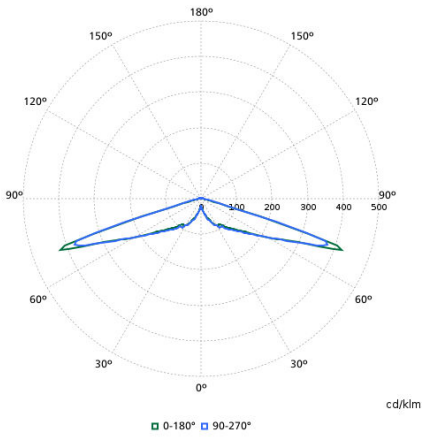

BDS491 LED70-/830 I S GRB GR 60
912300024687

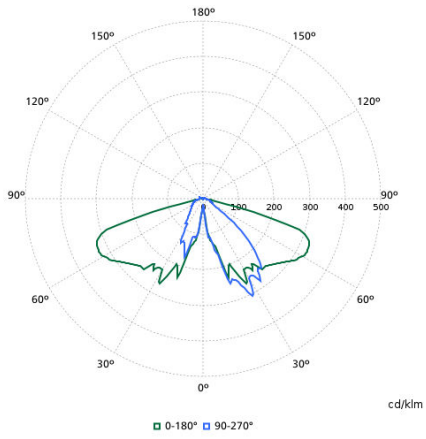

BDS491 LED30-/830 II DM GRB GR 60
912300024693

© 2026 Signify Holding. All rights reserved. The information provided herein is subject to change, without notice. Signify does not give any representation or warranty as to the accuracy or completeness of the information included herein and shall not be liable for any action in reliance thereon. The information presented in this document is not intended as any commercial offer and does not form part of any quotation or contract, unless otherwise agreed by Signify. All trademarks are owned by Signify Holding or their respective owners.