PHILIPS

**DL252 G2 R SQ LED 400 65K 6W 4" WV**

929002345901

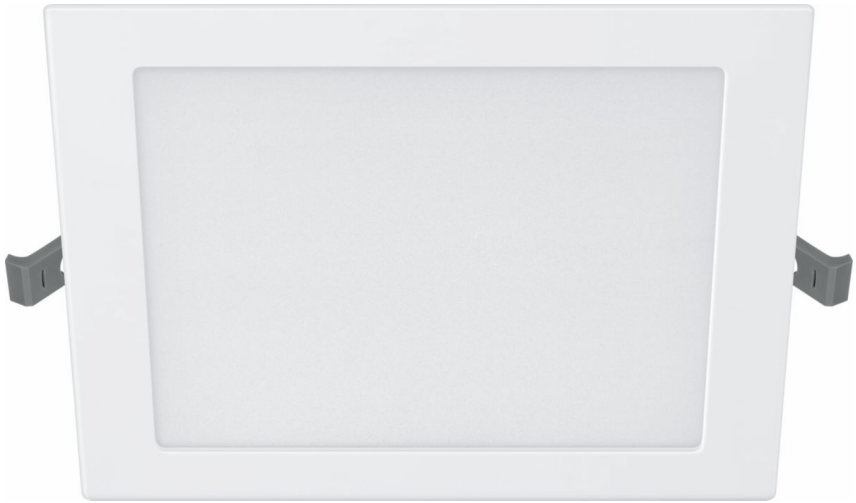

# External Slim Downlight DL252, 6 W, 400 lm, 6500 K, Beam angle 110°, White

Aluminum, White, Power supply unit (On/Off), 400 lm, 6 W, 66.00 lm/W, 6500 K, (0.3130 , , 0.3370) 6 SDCM, Beam angle 110°, Frosted, Polystyrene, IP20 | Finger-protected, IK03 | 0.3 J, Safety class II, Flying leads/wires

## General Information

| | |
|---|---|
| Light source replaceable | No |
| Number of gear units | 1 unit |
| Driver included | Yes |
| Nominal lifetime | 25,000 hour(s) |
| Switching Cycle | 12,500 |
| Lighting Technology | LED |
| Warranty period | 1 years |

## Light Technical

| | |
|---|---|
| Luminous Flux | 400 lm |
| Correlated Color Temperature (Nom) | 6500 K |
| Luminous Efficacy (rated) (Nom) | 66.00 lm/W |
| Color rendering index (CRI) | 80 |
| Light source color | 865 cool daylight |
| Optic type | Beam angle 110° |
| Luminaire light beam spread | 110° |

## Operating and Electrical

| | |
|---|---|
| Input Voltage | 110 to 240 V |
| Line Frequency | 50 or 60 Hz |
| Input Frequency | 50 or 60 Hz |
| Inrush current | 13.4 A |
| Inrush time | 0.5 ms |
| Power Consumption | 6 W |
| Power Factor (Fraction) | 0.5 |
| Connection | Flying leads/wires |
| Suitable for random switching | Not applicable |
| Protection class IEC | Safety class II |

## Controls and Dimming

| | |
|---|---|
| Dimmable | No |
| Driver/power unit/transformer | Power supply unit (On/Off) |
| Constant light output | No |

## Mechanical and Housing

| | |
|---|---|
| Housing Material | Aluminum |
| Reflector material | - |
| Optic material | Polystyrene |
| Optical cover material | Polystyrene |
| Fixation material | Steel |
| Housing Color | White |
| Optical cover finish | Frosted |
| Overall length | 116 mm |
| Overall width | 116 mm |
| Overall height | 20 mm |
| Overall diameter | 116 mm |
| Dimensions (Height x Width x Depth) | 20 x 116 x 116 mm |
| Net weight | 0.15 kg |
| Ingress protection code | IP20 [Finger-protected] |
| Mech. impact protection code | IK03 [0.3 J] |
| Net Weight (Piece) | 0.150 kg |

## Approval and Application

| | |
|---|---|
| Glow-wire test | Temperature 650 °C, duration 30 s |
| Flammability mark | For mounting on normally flammable surfaces |
| EU RoHS compliant | Yes |
| Warranty | 2 year(s) |
| EyeComfort | Yes |
| Ambient temperature range | -10 to +40 °C |

## Initial Performance (IEC Compliant)

| | |
|---|---|
| Initial chromaticity | (0.3130 , , 0.3370) 6 SDCM |

## Over Time Performance (IEC Compliant)

| | |
|---|---|
| Driver failure rate at 5000 h | 0.015 % |
| Median useful life L70B50 | 25,000 hour(s) |

## Product Data

| | |
|---|---|
| Order product name | DL252 G2 R SQ LED 400 65K 6W 4" WV |
| Full product name | DL252 G2 R SQ LED 400 65K 6W 4" WV |
| Full product code | 871869974873900 |
| Order code | 929002345901 |
| Material Nr. (12NC) | 929002345901 |
| Numerator - Quantity Per Pack | 1 |
| EAN/UPC - Product/Case | 8718699748739 |
| Numerator - Packs per outer box | 20 |
| EAN/UPC - Case | 8718699748746 |

## Dimensional drawing

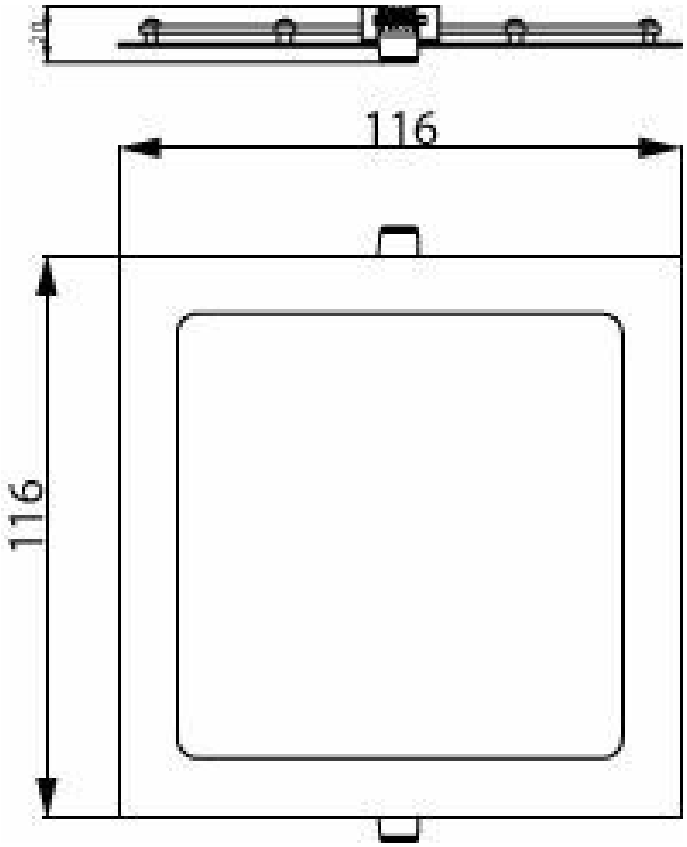


## Photometric data

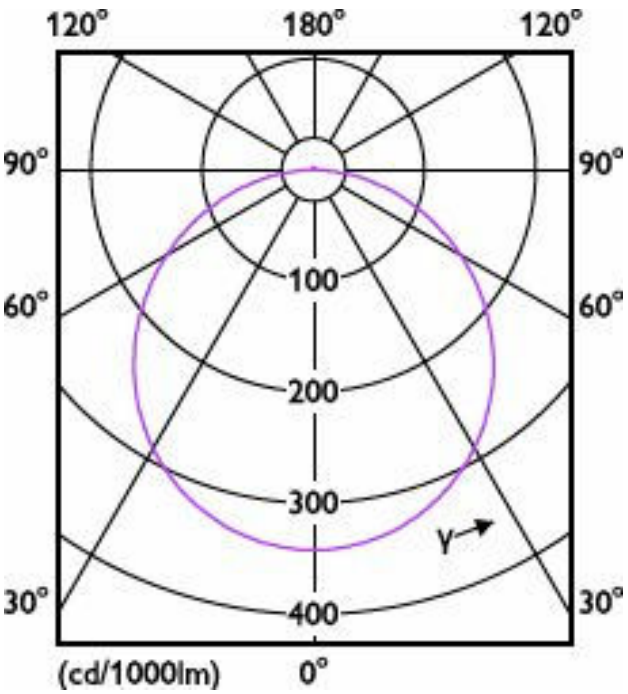


Light Distribution Diagram - DL252 G2 R SQ LED 400 65K 6W 4" WV

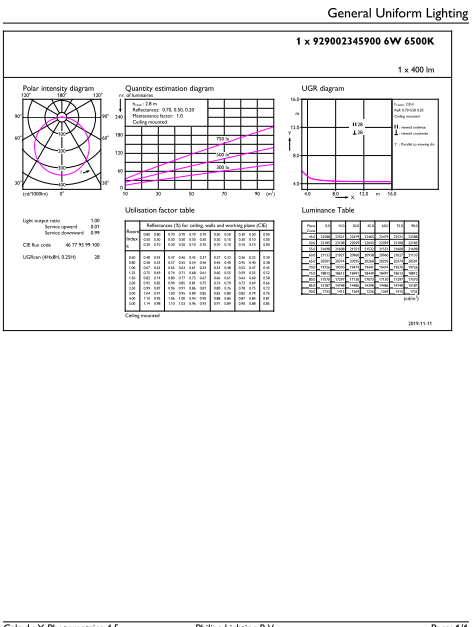
General Uniform Lighting

1 x 929002345900 6W 6500K

1 x 400 lm

Polar intensity diagram

Quantity estimation diagram

UGR diagram

Utilisation factor table

Luminance Table

CalcuLuX Photometrics 4.5 Philips Lighting B.V. Page: 1/1

General uniform lighting - DL252 G2 R SQ LED 400 65K 6W 4" WV

## Lifetime

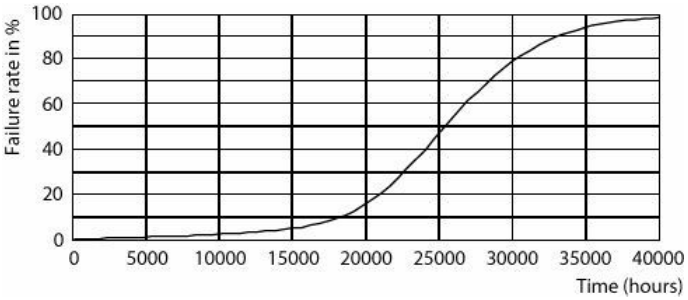


L70B-50 25K-LED

## Related Documents

| Documents and certificates | Document Name | Download |
|---|---|---|
| Environmental Product Declaration | Philips-DL252-G2-DL252-Ref-929002345701-EPD.pdf | Download |

| Photometry and lighting design | Document Name | Download |
|---|---|---|
| IES File | Downlight_DL252_G2_LED_R_SQ_400lm_65K-IES.ies | Download |

© 2026 Signify Holding. All rights reserved. The information provided herein is subject to change, without notice. Signify does not give any representation or warranty as to the accuracy or completeness of the information included herein and shall not be liable for any action in reliance thereon. The information presented in this document is not intended as any commercial offer and does not form part of any quotation or contract, unless otherwise agreed by Signify. Philips and the Philips Shield Emblem are registered trademarks of Koninklijke Philips N.V.