PHILIPS

DN065B G4 12S/ 830_840_865 PSU-E D150 RD

929004083532



Multi ColorTemp

Ledinaire SlimDownlight, All-in, 12 W, 1200 lm, 3000 K, Beam angle 100°, White

Metal, White, All-in, Multi Color Temperature, 1200 lm, 12 W, 100 lm/W, 3000 K, (ANSI3000K, 0.4339;, 0.4033 ; 4000K0.3761;0.3658 ; ANSI6500K0.3123;0.3283) 5SDCM, Beam angle 100°, Frosted, Polycarbonate, IP20/44 | Finger-protected; wire-protected, splash-proof, IK03 | 0.35 J reinforced, Safety class II, Push-in connector 3-pole, Self-contained emergency lighting is possible when used with a compatible battery kit accessory

General Information

Light source replaceable	No
Number of gear units	1 unit
Driver included	Yes
Mounting	Recessed
Value ladder	Value
Warranty period	5 years

Light Technical

Luminous Flux	1,200 lm
Correlated Color Temperature (Nom)	3000 K
Luminous Efficacy (rated) (Nom)	100 lm/W
Color rendering index (CRI)	80
Light source color	3000/4000/6500
Optic type	Beam angle 100°
Luminaire light beam spread	110°
Unified glare rating CEN	28

Photobiological safety according to EN 62471	RG0
All-in Type	All-in, Multi Color Temperature

Operating and Electrical

Input Voltage	220 to 240 V
Input Frequency	50 or 60 Hz
Inrush current	5 A
Inrush time	0.1 ms
Power Consumption	12 W
Power Factor (Fraction)	0.9
Connection	Push-in connector 3-pole
Cable	Cable with connector 2-pole
Number of products on MCB of 16 A type B	212
Suitable for random switching	Yes
Protection class IEC	Safety class II
Total harmonic distortion	20 %

Controls and Dimming

Dimmable	No
Constant light output	No

Mechanical and Housing

Housing Material	Metal
Reflector material	-
Optic material	Acrylate
Optical cover material	Polycarbonate
Fixation material	Steel
Housing Color	White
Optical cover finish	Frosted
Overall height	25 mm
Overall diameter	170 mm
Ingress protection code	IP20/44 [Finger-protected; wire-protected, splash-proof]
Mech. impact protection code	IK03 [0.35 J reinforced]
Mounting	Recessed
Net Weight (Piece)	0.300 kg

Emergency Operation

Central Emergency	No
Emergency lighting	Self-contained emergency lighting is possible when used with a compatible battery kit accessory

Approval and Application

Insulation Coverage Rating	Full coverage acc. to IEC 60598-1 9.0
Glow-wire test	Temperature 650 °C, duration 30 s
Flammability mark	For mounting on normally flammable surfaces
CE mark	Yes
EU RoHS compliant	Yes
Flickering value (PstLM) - Flickering value as per EN 61000-3-3	0.9
Stroboscopic effect visibility measure (SVM)	0.3
Ambient temperature range	-20 to +40 °C

Initial Performance (IEC Compliant)

Luminous flux tolerance	+/-10%
Initial chromaticity	(ANSI3000K, 0.4339;, 0.4033 ; 4000K0.3761;0.3658 ; ANSI6500K0.3123;0.3283) 5SDCM
Power consumption tolerance	+/-10%

Over Time Performance (IEC Compliant)

Median useful life L70B50	50,000 hour(s)
Lumen maintenance (EN-IEC 62722-2-1) at median useful life* 50000 h	L70

Sustainability Data

Repair class	Repair Class D, this product is not designed to be repaired.
Non-virgin material ratio of the packaging	Cardboard > 80% recycled
Packaging Recyclable content ratio	Cardboard recycling rate > 80%
Packaging Material	Cardboard

Product Data

Order product name	DN065B G4 12S/830_840_865 PSU-E D150 RD
Full product name	DN065B G4 12S/830_840_865 PSU-E D150 RD
Full product code	872016930395901
Order code	929004083532

Material Nr. (12NC)	929004083532
Numerator - Quantity Per Pack	1
EAN/UPC - Product/Case	8720169303959
Numerator - Packs per outer box	12
EAN/UPC - Case	8720169303966

Dimensional drawing

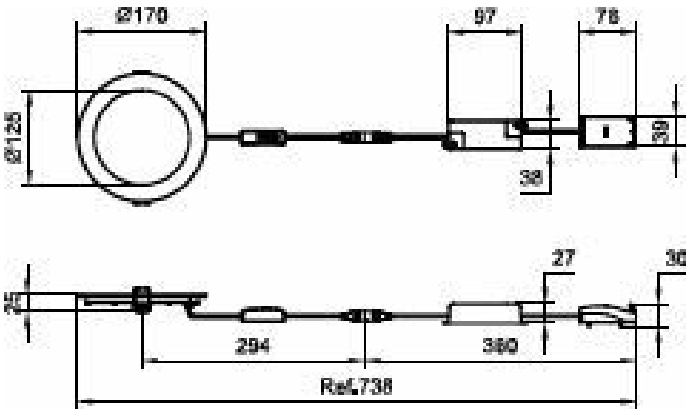

Photometric data

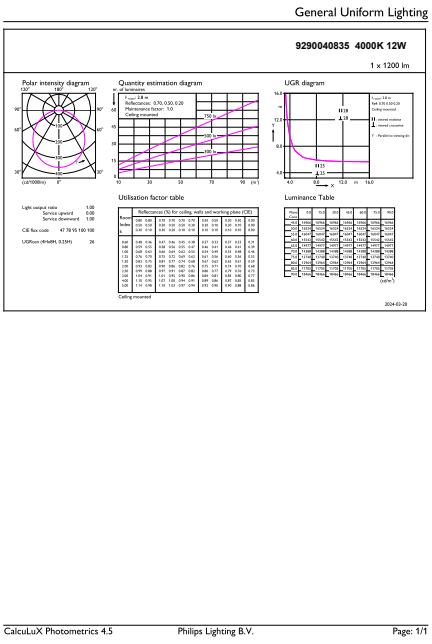

General uniform lighting - DN065B G4 12S/830_840_865 PSU-E D150 RD

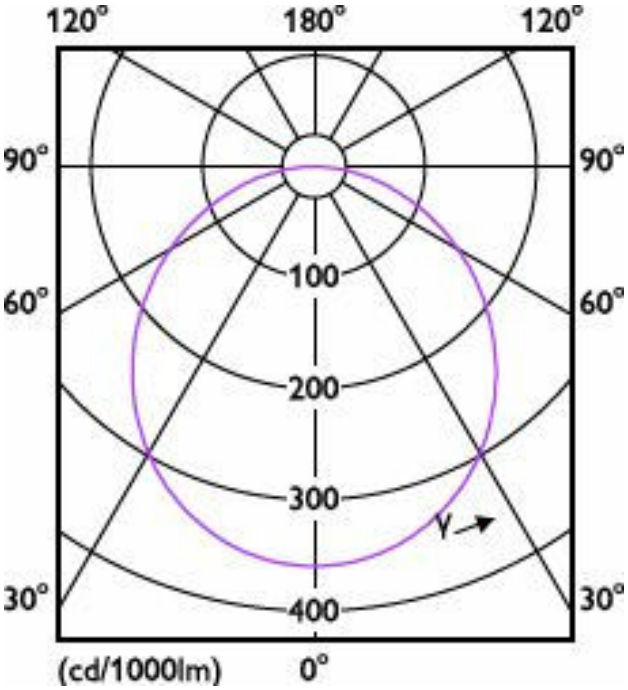

Light Distribution Diagram - DN065B G4 12S/830_840_865 PSU-E D150 RD

Compatible Accesories

Accessory Image	Accessory Code	Accessory Name	Website
	912401483602	EM300V ELB_ELP3 kit LV 3.6V 4800mAh LIB	Product Website

Related Documents

Documents and certificates	Document Name	Download
Installation Instructions	Ledinaire-SlimDownlight-gen4-PSU-E-INI.pdf	Download

Photometry and lighting design	Document Name	Download
IES File	DN065B-G4-12S-830-840-865-PSU-E-D150-RD-IES.ies	Download

© 2026 Signify Holding. All rights reserved. The information provided herein is subject to change, without notice. Signify does not give any representation or warranty as to the accuracy or completeness of the information included herein and shall not be liable for any action in reliance thereon. The information presented in this document is not intended as any commercial offer and does not form part of any quotation or contract, unless otherwise agreed by Signify. Philips and the Philips Shield Emblem are registered trademarks of Koninklijke Philips N.V.