PHILIPS

CoreView G4 RC420B

9343932

A full indirect light troffer

RC420B G4 inherits the elegant and classic indirect light design from previous generation but with slimmer outlook. It offers 3 types, 600x600,300x1200, and 600x1200 (Customized offer)mm with max: 108lm/w. Air slot option applies to 600x1200mm type to give fast and easy support to the projects where air outlet is required from the office lighting fittings. Full indirect light design provides visual comfort in the office area as well.

Benefits

- Full range offer from 600x600, 300x1200 to 600x1200(Customized offer) to cover key applications
- High system efficacy from indirect light design to provide additional energy saving
- Dali, Tunable white, Interact Office options are available for total system offer
- Slim design for critical office space installation

Applications

- Open plan office
- Public indoor area
- Meeting/Training room

Features

- System efficiency 108lm/W(max)
- CRI80 and CRI90 (with customized solution)
- Max height <=90mm (without driver)
- Lifetime: 50K hours (L70@25deg)

Versions



CoreView G4 RC420 603603



CoreView G4 RC420 3001200



CoreView G4 RC420 300300



CoreView G4 RC420 600600

Dimensional drawing

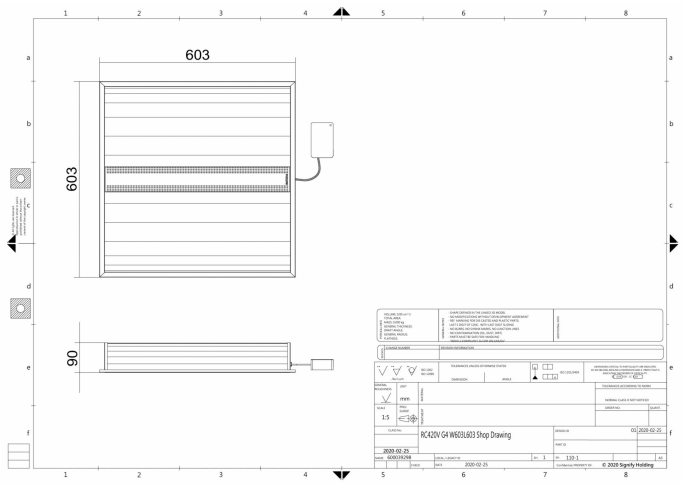

RC420V G4 W603L603

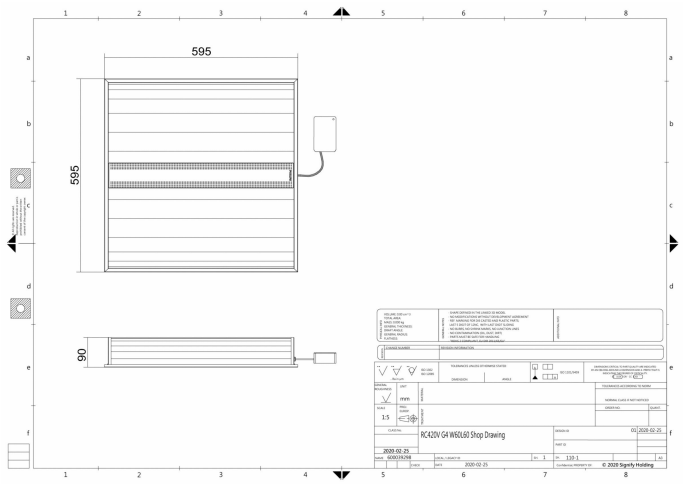

RC420V G4 W60L60

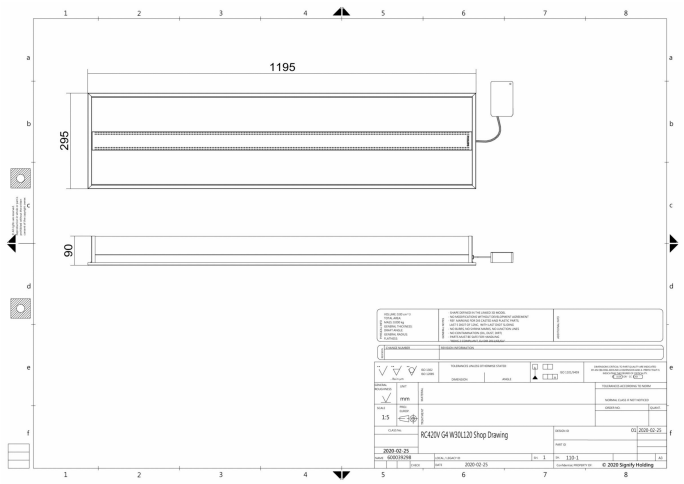

RC420V G4 W30L120

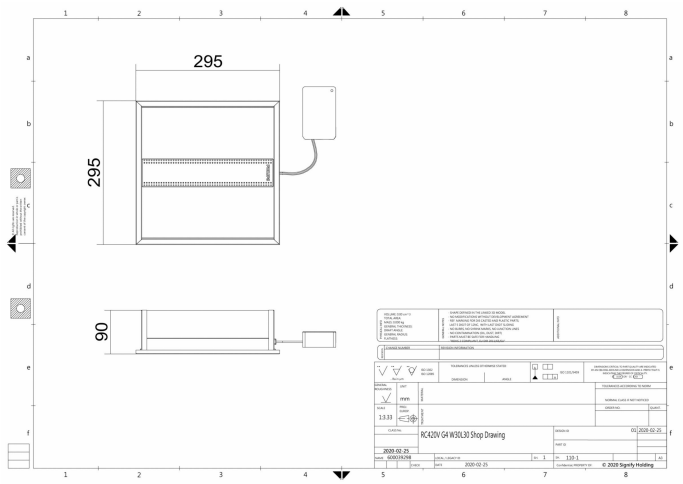

RC420V G4 W30L30

General Information

Driver included	Yes
Service tag	Yes

Operating and Electrical

Line Frequency	50 or 60 Hz

Mechanical and Housing

Housing Color	White RAL 9003
Ingress protection code	IP20 [Finger-protected]
Mech. impact protection code	-
Optical cover type	-

Approval and Application

CE mark	Yes
Ambient temperature range	-20 to +45 °C

Initial Performance (IEC Compliant)

Luminous flux tolerance	+/-10%

Light Technical

Order Code	Full Product Name	Luminous Flux	Correlated Color Temperature (Nom)	Luminous Efficacy (rated) (Nom)	Color rendering index (CRI)
911401594671	RC420V G4 LED38/840 W603L603 PSU	3,700 lm	4000 K	103 lm/W	>80
911401595471	RC420V G4 LED35/940 W603L603 PSU	3,500 lm	4000 K	97 lm/W	>90
911401596271	RC420V G4 LED38/840 W603L603 PSD	3,700 lm	4000 K	103 lm/W	>80
911401594071	RC420V G4 LED38/840 W30L120 PSU	4,000 lm	4000 K	111 lm/W	>80
911401594171	RC420V G4 LED38/850 W30L120 PSU	4,000 lm	5000 K	111 lm/W	>80
911401594871	RC420V G4 LED35/940 W30L120 PSU	3,780 lm	4000 K	105 lm/W	>90
911401594971	RC420V G4 LED35/950 W30L120 PSU	3,780 lm	5000 K	105 lm/W	>90
911401595671	RC420V G4 LED38/840 W30L120 PSD	4,000 lm	4000 K	111 lm/W	>80
911401597471	RC420V G4 LED38/9TW W30L120	3,290 lm	3000 - 6500 K	89 lm/W	>80
911401595271	RC420V G4 LED16/940 W30L30 PSU	1,700 lm	4000 K	89 lm/W	>90
911401595371	RC420V G4 LED16/950 W30L30 PSU	1,700 lm	5000 K	89 lm/W	>90
911401594271	RC420V G4 LED38/840 W60L60 PSU	3,800 lm	4000 K	106 lm/W	>80
911401594371	RC420V G4 LED38/850 W60L60 PSU	3,800 lm	5000 K	106 lm/W	>80
911401595071	RC420V G4 LED35/940 W60L60 PSU	3,600 lm	4000 K	100 lm/W	>90
911401595171	RC420V G4 LED35/950 W60L60 PSU	3,600 lm	5000 K	100 lm/W	>90
911401595871	RC420V G4 LED38/840 W60L60 PSD	3,800 lm	4000 K	106 lm/W	>80
911401595971	RC420V G4 LED38/850 W60L60 PSD	3,800 lm	5000 K	106 lm/W	>80

Order Code	Full Product Name	Luminous Flux	Correlated Color Temperature (Nom)	Luminous Efficacy (rated) (Nom)	Color rendering index (CRI)
911401596671	RC420V G4 LED35/940 W60L60 PSD	3,600 lm	4000 K	100 lm/W	>90
911401597371	RC420V G4 LED38/8TW W60L60	3,500 lm	3000 - 6500 K	90 lm/W	>80
911401597571	RC420V G4 LED38/9TW W60L60	3,290 lm	3000 - 6500 K	84 lm/W	>80

Operating and Electrical

Order Code	Full Product Name	Input Voltage	Power Consumption	Protection class IEC
911401594671	RC420V G4 LED38/840 W603L603 PSU	110 to 240 V	36 W	Safety class II
911401595471	RC420V G4 LED35/940 W603L603 PSU	110 to 240 V	36 W	Safety class II
911401596271	RC420V G4 LED38/840 W603L603 PSD	110 to 240 V	36 W	Safety class II
911401594071	RC420V G4 LED38/840 W30L120 PSU	220 to 240 V	36 W	Safety class II
911401594171	RC420V G4 LED38/850 W30L120 PSU	220 to 240 V	36 W	Safety class II
911401594871	RC420V G4 LED35/940 W30L120 PSU	220 to 240 V	36 W	Safety class II
911401594971	RC420V G4 LED35/950 W30L120 PSU	220 to 240 V	36 W	Safety class II
911401595671	RC420V G4 LED38/840 W30L120 PSD	220 to 240 V	36 W	Safety class II
911401597471	RC420V G4 LED38/9TW W30L120	220 to 240 V	37 W	Safety class I
911401595271	RC420V G4 LED16/940 W30L30 PSU	220 to 240 V	19 W	Safety class II
911401595371	RC420V G4 LED16/950 W30L30 PSU	220 to 240 V	19 W	Safety class II
911401594271	RC420V G4 LED38/840 W60L60 PSU	220 to 240 V	36 W	Safety class II
911401594371	RC420V G4 LED38/850 W60L60 PSU	220 to 240 V	36 W	Safety class II
911401595071	RC420V G4 LED35/940 W60L60 PSU	220 to 240 V	36 W	Safety class II
911401595171	RC420V G4 LED35/950 W60L60 PSU	220 to 240 V	36 W	Safety class II
911401595871	RC420V G4 LED38/840 W60L60 PSD	220 to 240 V	36 W	Safety class II
911401595971	RC420V G4 LED38/850 W60L60 PSD	220 to 240 V	36 W	Safety class II
911401596671	RC420V G4 LED35/940 W60L60 PSD	220 to 240 V	36 W	Safety class II
911401597371	RC420V G4 LED38/8TW W60L60	220 to 240 V	39 W	Safety class I
911401597571	RC420V G4 LED38/9TW W60L60	220 to 240 V	39 W	Safety class I

Controls and Dimming

Order Code	Full Product Name	Dimmable
911401594671	RC420V G4 LED38/840 W603L603 PSU	No
911401595471	RC420V G4 LED35/940 W603L603 PSU	No
911401596271	RC420V G4 LED38/840 W603L603 PSD	Yes
911401594071	RC420V G4 LED38/840 W30L120 PSU	No
911401594171	RC420V G4 LED38/850 W30L120 PSU	No
911401594871	RC420V G4 LED35/940 W30L120 PSU	No
911401594971	RC420V G4 LED35/950 W30L120 PSU	No
911401595671	RC420V G4 LED38/840 W30L120 PSD	Yes
911401597471	RC420V G4 LED38/9TW W30L120	Yes
911401595271	RC420V G4 LED16/940 W30L30 PSU	No
911401595371	RC420V G4 LED16/950 W30L30 PSU	No

Order Code	Full Product Name	Dimmable
911401594271	RC420V G4 LED38/840 W60L60 PSU	No
911401594371	RC420V G4 LED38/850 W60L60 PSU	No
911401595071	RC420V G4 LED35/940 W60L60 PSU	No
911401595171	RC420V G4 LED35/950 W60L60 PSU	No
911401595871	RC420V G4 LED38/840 W60L60 PSD	Yes
911401595971	RC420V G4 LED38/850 W60L60 PSD	Yes
911401596671	RC420V G4 LED35/940 W60L60 PSD	Yes
911401597371	RC420V G4 LED38/8TW W60L60	Yes
911401597571	RC420V G4 LED38/9TW W60L60	Yes

© 2026 Signify Holding. All rights reserved. The information provided herein is subject to change, without notice. Signify does not give any representation or warranty as to the accuracy or completeness of the information included herein and shall not be liable for any action in reliance thereon. The information presented in this document is not intended as any commercial offer and does not form part of any quotation or contract, unless otherwise agreed by Signify. Philips and the Philips Shield Emblem are registered trademarks of Koninklijke Philips N.V.