PHILIPS

Ledinaire panel gen5

RC065B



Proven quality. Effortless installation. Every time. Your dependable and affordable choice for every job

The Philips Ledinaire panel Gen5 (RC065B/RC066B) range features a selection of popular off-the-shelf LED luminaires that offer Philips high quality at a competitive price. Reliable, energy-efficient and affordable, this latest generation of 600 x 600 mm, 620 x 620 mm, 300 x 1200 mm, and 600 x 1200 Ledinaire LED panel lights are designed for diffuse, comfortable lighting in a wide range of general lighting applications. Our range of Ledinaire panels lighting is also available with accessories for easy installation on different types of ceilings—just what you need.

Benefits

- No risks, trusted performance
- Good quality, easy to use
- No confusion, easy product selection
- Innovative All-in multicolor and basic lighting control versions
- Broad range

Applications

- Offices
- Healthcare
- Education
- Municipal buildings
- Retail

Features

- 3400 lm/ 3600 lm / 4100 lm: L80 at 50K hrs, L70 75K hrs and 3-year warranty
- IP20/IP40
- Connectors: white quick connectors and flywire
- Sizes: 60 x 60 mm / 62 x 62 mm / 30 x 120 mm / 60 x 120 mm
- Color rendering: CRI 80 at SDCM <5

- 3000K / 3500K / 4000K / 6500K
- PSU / PSD
- Efficacy: 120Lm/W
- All-in: 3000K, 3500K, and 4000K in one luminaire

Versions



Ledinaire Panel PSD All-in 830_835_840 W60L60 OC

Ledinaire panel G5 60x120

Ledinaire panel G5 62x62



Ledinaire Panel PSU All-in 830_835_840 W60L60 OC



Ledinaire Panel All-in PSU 60x60

Ledinaire panel G5 60x60



Ledinaire Panel G5 All in W30L120 RTP



Ledinaire Panel PSU All-in 830_835_840 W62L62

Ledinaire Panel RC065B Square ELR

Dimensional drawing

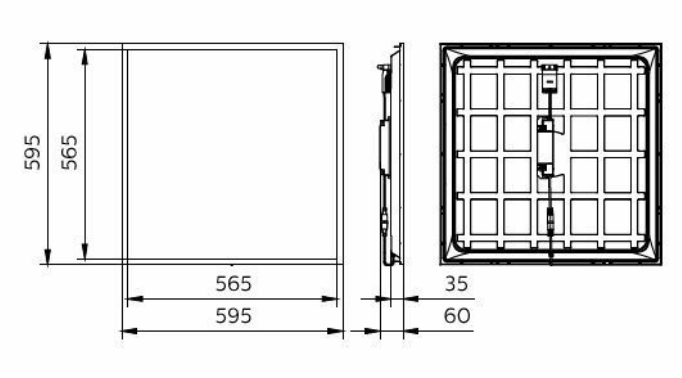

RC065B G5 34_36S/830_40 PSU W60L60 OC SC

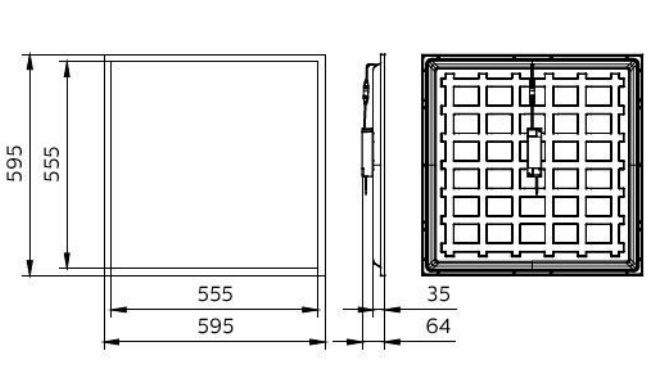

RC065B G5 34S/840 PSU W60L60 OC CFW 2

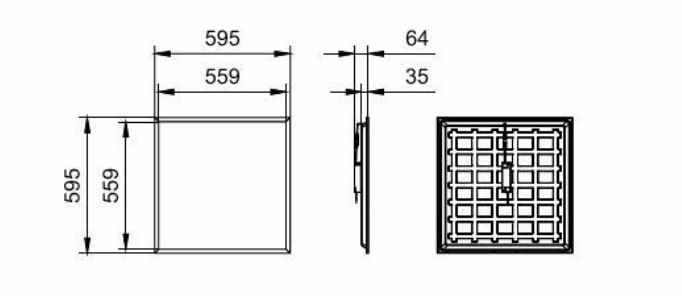

RC065B G5 34S/840 PSU W60L60 OC CFW ELR

RC065B G5 34S/840 PSU W60L60 NOC SC

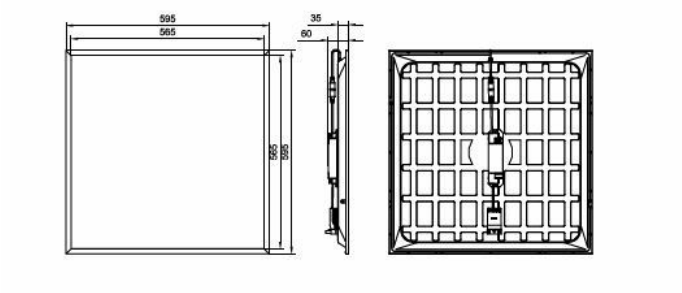

RC065B G5 34_36S/830_40 PSU 60x60 NOC SC

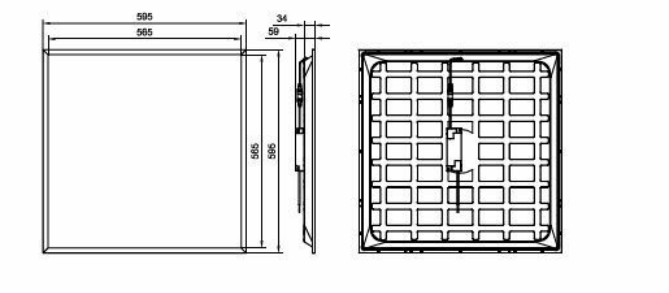

RC065B G5 41S/840 PSU W60L60 NOC CFW CL

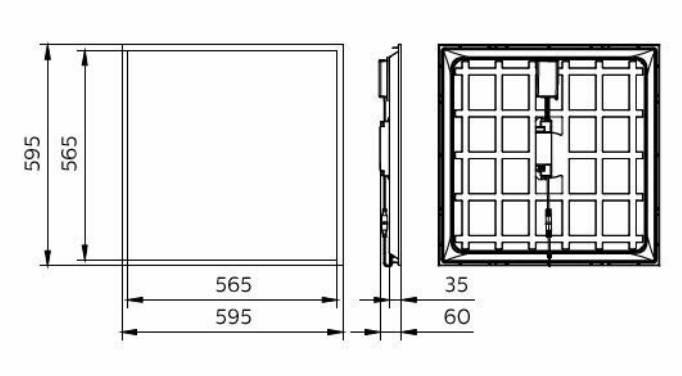

RC065B G5 34S/840 PSD W60L60 OC SC

RC066B 34S/840 PSU W62L62 OC

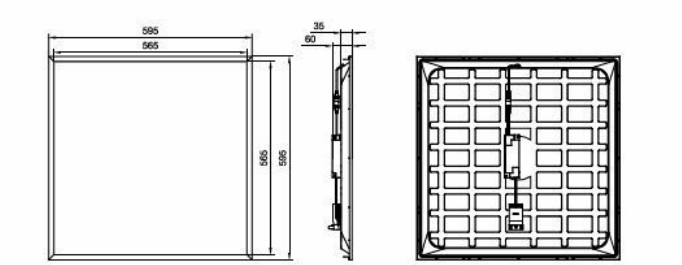

RC065B G5 34S/840 PSU W60L60 OC 6PK SC

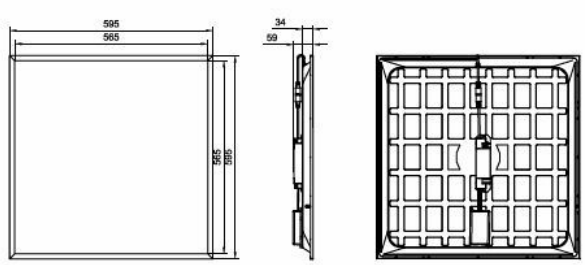

RC065B G5 34_36S/830_40 PSD 60x60 NOC SC

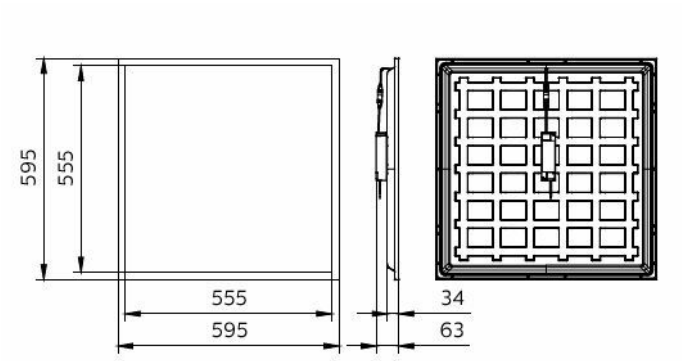

RC065B G5 34S/840 PSU W60L60 NOC CFW 2CL

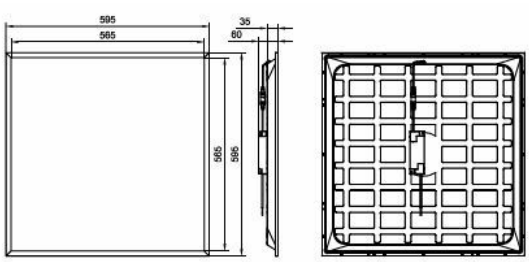

RC065B G5 34S/840 PSU W60L60 OC CFW CL

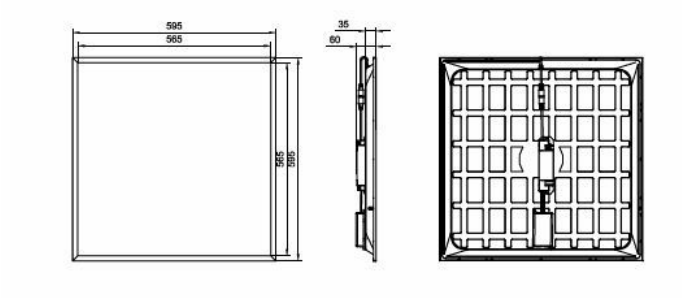

RC065B G5 34_36S/830_40 PSD W60L60 OC SC

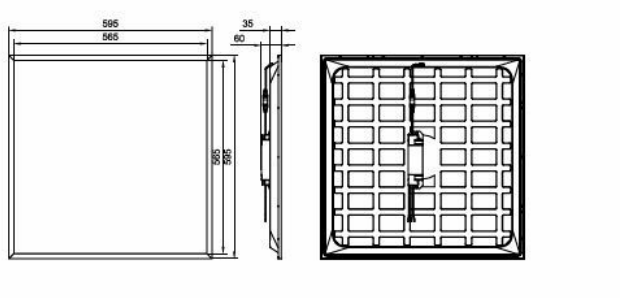

RC065B G5 34S/840 PSD W60L60 OC CFW

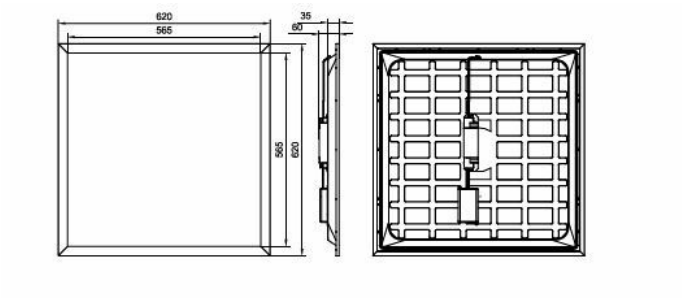

RC066B 34S/840 PSD W62L62 OC

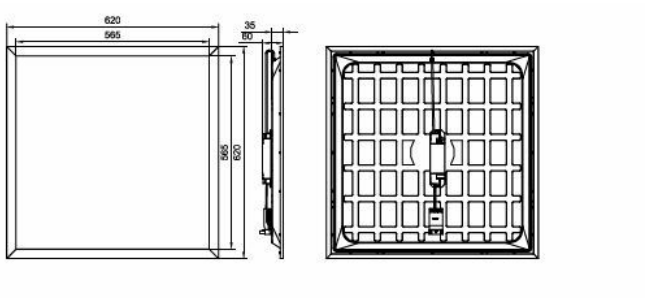

RC066B 34_36S/830_40 PSU W62L62 OC

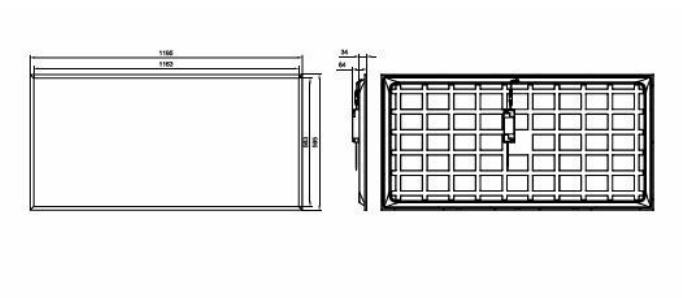

RC065B G5 60S/840 PSU 60x120 NOC TPb CFW

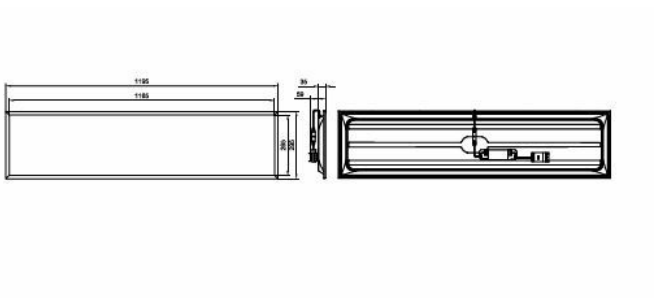

RC065B G5 34_36S/830_40 PSU 30x120 OC SC

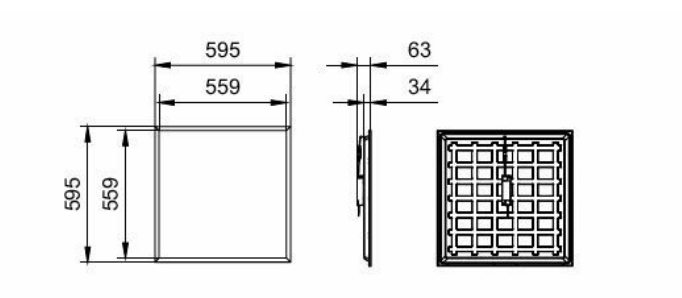

RC065B G5 34S/840 PSU W60L60 NOC CFW ELR

Product details



Ledinaire Panel RC066B Square backside

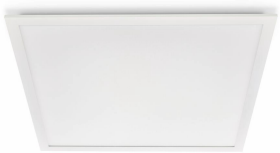

Ledinaire Panel G5 RC066B-frontside-straight



Ledinaire Panel G5 All in CCT Switch 3000K



Ledinaire Panel G5 Back housing PSU Flywire (CFW)



White Quick connector-closed



Panel flywires CFW + backside panel



Ledinaire Panel G5 All in CCT Switch PSU ON OFF Driver Open connector



Ledinaire Panel G5 PSD DALI Driver Open connector



Ledinaire Panel G5 All in CCT Switch PSD ON OFF Driver Closed connector

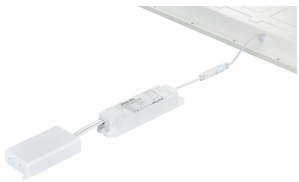

Ledinaire Panel G5 PSD DALI Driver Closed connector



Ledinaire panel G5 frame and optical area 60x120

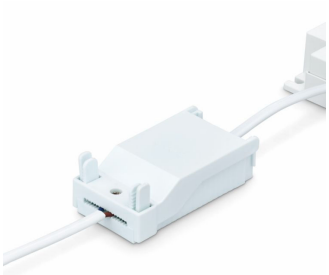

White Quick connector+wire-closed



Ledinaire Panel Gen 5-RC065B W60L120-backside



White Quick connector +wire-open

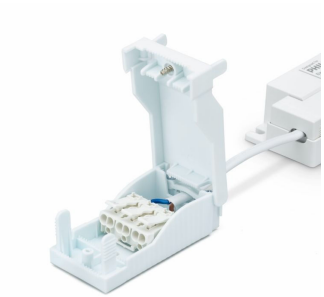

White Quick connector-open



Ledinaire Panel G5 All in CCT Switch PSD ON OFF Driver Open connector

Ledinaire Panel RC065B G5 30x120 Packaging



Panel flywires CFW



Ledinaire Panel G5 Back housing PSU Connector



Ledinaire Panel RC065B Square backside



Ledinaire Panel Gen 5-RC065B_RC066B Square-backside-PSU driver and connector



Ledinaire Panel Gen 5-RC065B_RC066B Square-backside



Ledinaire Panel RC065B G5 PSU 30x120 Backside



Ledinaire Panel G5 All in CCT Switch PSU ON OFF Driver Closed connector



Ledinaire Panel G5 All in CCT Switch 3500K



Ledinaire Panel G5 All in CCT Switch 4000K



Ledinair Panel flywires CFW



Ledinaire Panel Gen 5-RC065B W60L120-backside-PSU driver and Flywire



Ledinaire Panel Gen 5-RC065B_RC066B Square-backside-PSU driver and connector



Ledinaire panel G5 frame and optical area 62x62

General Information

Number of gear units	1 unit
Driver included	Yes
Service tag	No

Light Technical

Luminous Efficacy (rated) (Nom)	120 lm/W
All-in Type	All-in, Multi Color Temperature

Operating and Electrical

Line Frequency	50 or 60 Hz
Suitable for random switching	Yes
Protection class IEC	Safety class II

Mechanical and Housing

Housing Color	White
Ingress protection code	IP20/40 [Finger-protected, Emitting surface]

Emergency Operation

Central Emergency	No
Emergency lighting	Self-contained emergency lighting is possible when used with a compatible battery kit accessory

Approval and Application

Glow-wire test	Temperature 650 °C, duration 30 s
Flammability mark	For mounting on normally flammable surfaces
CE mark	Yes
ENEC mark	-
Flickering value (PstLM) - Flickering value as per EN 61000-3-3	1
Ambient temperature range	-10 to +35 °C

Light Technical

Order Code	Full Product Name	Luminous Flux	Correlated Color Temperature (Nom)	Color rendering index (CRI)	Beam angle of light source	Optic type
911401844387	RC065B G5 34_36S/830_40 PSD 60x60 NOC SC	3,400 lm 3,600 lm	3000 K 3500 K 4000 K	80	120 degree(s)	Beam angle 120°
911401877485	RC065B G5 34_36S/830_40 PSD W60L60 OC SC	3,400 lm 3,600 lm	3000 K 3500 K 4000 K	80	90 degree(s)	Beam angle 90°
911401876985	RC065B G5 60S/840 PSU 60x120 NOC TPb CFW	6,000 lm	4000 K	80	120 degree(s)	Beam angle 120°
911401876685	RC066B 34S/840 PSU W62L62 OC	3,400 lm	4000 K	80	90 degree(s)	Beam angle 90°
911401876785	RC066B 34S/840 PSD W62L62 OC	3,400 lm	4000 K	80	90 degree(s)	Beam angle 90°
911401877285	RC065B G5 34_36S/830_40 PSU W60L60 OC SC	3,400 lm 3,600 lm	3000 K 3500 K 4000 K	80	90 degree(s)	Beam angle 90°
911401877385	RC065B G5 34_36S/830_40 PSU 60x60 NOC SC	3,400 lm 3,600 lm	3000 K 3500 K 4000 K	80	120 degree(s)	Beam angle 120°
911401873685	RC065B G5 34S/840 PSU W60L60 OC CFW 2	3,400 lm	4000 K	80	90 degree(s)	Beam angle 90°
911401873885	RC065B G5 34S/840 PSU W60L60 NOC CFW 2	3,400 lm	4000 K	80	120 degree(s)	Beam angle 120°
911401874085	RC065B G5 34S/840 PSU W60L60 NOC CFW 2CL	3,400 lm	4000 K	80	120 degree(s)	Beam angle 120°
911401874185	RC065B G5 34S/840 PSU W60L60 OC CFW 2 CL	3,400 lm	4000 K	80	90 degree(s)	Beam angle 90°
911401875185	RC065B G5 34S/840 PSU W60L60 OC CFW	3,400 lm	4000 K	80	90 degree(s)	Beam angle 90°
911401875285	RC065B G5 34S/840 PSU W60L60 OC SC	3,400 lm	4000 K	80	90 degree(s)	Beam angle 90°
911401875385	RC065B G5 34S/865 PSU W60L60 OC CFW	3,400 lm	6500 K	80	90 degree(s)	Beam angle 90°
911401875485	RC065B G5 34S/840 PSU W60L60 NOC CFW	3,400 lm	4000 K	80	120 degree(s)	Beam angle 120°
911401875585	RC065B G5 34S/840 PSU W60L60 NOC SC	3,400 lm	4000 K	80	120 degree(s)	Beam angle 120°
911401875685	RC065B G5 34S/865 PSU W60L60 NOC CFW	3,400 lm	6500 K	80	120 degree(s)	Beam angle 120°

Order Code	Full Product Name	Luminous Flux	Correlated Color Temperature (Nom)	Color rendering index (CRI)	Beam angle of light source	Optic type
911401875785	RC065B G5 34S/840 PSD W60L60 OC CFW	3,400 lm	4000 K	80	90 degree(s)	Beam angle 90°
911401875885	RC065B G5 34S/840 PSD W60L60 OC SC	3,400 lm	4000 K	80	90 degree(s)	Beam angle 90°
911401875985	RC065B G5 41S/840 PSU W60L60 NOC CFW	4,100 lm	4000 K	80	120 degree(s)	Beam angle 120°
911401876085	RC065B G5 41S/840 PSU W60L60 OC CFW	4,100 lm	4000 K	80	90 degree(s)	Beam angle 90°
911401876185	RC065B G5 41S/840 PSU W60L60 NOC CFW CL	4,100 lm	4000 K	80	120 degree(s)	Beam angle 120°
911401876285	RC065B G5 41S/840 PSU W60L60 OC CFW CL	4,100 lm	4000 K	80	90 degree(s)	Beam angle 90°
911401876385	RC065B G5 34S/840 PSU W60L60 NOC CFW CL	3,400 lm	4000 K	80	120 degree(s)	Beam angle 120°
911401876485	RC065B G5 34S/840 PSU W60L60 OC CFW CL	3,400 lm	4000 K	80	90 degree(s)	Beam angle 90°
911401877085	RC065B G5 34S/840 PSU W60L60 OC 6PK SC	3,400 lm	4000 K	80	90 degree(s)	Beam angle 90°
911401877585	RC065B G5 34_36S/830_40 PSU 30x120 OC SC	3,400 lm 3,600 lm	3000 K 3500 K 4000 K	80	90 degree(s)	Beam angle 90°
911401877185	RC066B 34_36S/830_40 PSU W62L62 OC	3,400 lm 3,600 lm	3000 K 3500 K 4000 K	80	90 degree(s)	Beam angle 90°
911401871288	RC065B G5 34S/840 PSU W60L60 OC CFW ELR	3,400 lm	4000 K	>80	-	Symmetrical
911401871388	RC065B G5 34S/840 PSU W60L60 NOC CFW ELR	3,400 lm	4000 K	>80	-	Symmetrical

Operating and Electrical

Order Code	Full Product Name	Input Voltage	Power Consumption
911401844387	RC065B G5 34_36S/830_40 PSD 60x60 NOC SC	220 to 240 V	28 W
911401877485	RC065B G5 34_36S/830_40 PSD W60L60 OC SC	220 to 240 V	28 W
911401876985	RC065B G5 60S/840 PSU 60x120 NOC TPb CFW	220 to 240 V	50 W
911401876685	RC066B 34S/840 PSU W62L62 OC	220 to 240 V	28 W
911401876785	RC066B 34S/840 PSD W62L62 OC	220 to 240 V	28 W
911401877285	RC065B G5 34_36S/830_40 PSU W60L60 OC SC	220 to 240 V	30 W
911401877385	RC065B G5 34_36S/830_40 PSU 60x60 NOC SC	220 to 240 V	30 W
911401873685	RC065B G5 34S/840 PSU W60L60 OC CFW 2	220 to 240 V	28 W
911401873885	RC065B G5 34S/840 PSU W60L60 NOC CFW 2	220 to 240 V	28 W
911401874085	RC065B G5 34S/840 PSU W60L60 NOC CFW 2CL	220 to 240 V	28 W
911401874185	RC065B G5 34S/840 PSU W60L60 OC CFW 2 CL	220 to 240 V	28 W
911401875185	RC065B G5 34S/840 PSU W60L60 OC CFW	220 to 240 V	28 W
911401875285	RC065B G5 34S/840 PSU W60L60 OC SC	220 to 240 V	28 W
911401875385	RC065B G5 34S/865 PSU W60L60 OC CFW	220 to 240 V	28 W
911401875485	RC065B G5 34S/840 PSU W60L60 NOC CFW	220 to 240 V	28 W
911401875585	RC065B G5 34S/840 PSU W60L60 NOC SC	220 to 240 V	28 W
911401875685	RC065B G5 34S/865 PSU W60L60 NOC CFW	220 to 240 V	28 W
911401875785	RC065B G5 34S/840 PSD W60L60 OC CFW	220 to 240 V	28 W
911401875885	RC065B G5 34S/840 PSD W60L60 OC SC	220 to 240 V	28 W
911401875985	RC065B G5 41S/840 PSU W60L60 NOC CFW	220 to 240 V	34 W
911401876085	RC065B G5 41S/840 PSU W60L60 OC CFW	220 to 240 V	34 W

Order Code	Full Product Name	Input Voltage	Power Consumption
911401876185	RC065B G5 41S/840 PSU W60L60 NOC CFW CL	220 to 240 V	34 W
911401876285	RC065B G5 41S/840 PSU W60L60 OC CFW CL	220 to 240 V	34 W
911401876385	RC065B G5 34S/840 PSU W60L60 NOC CFW CL	220 to 240 V	28 W
911401876485	RC065B G5 34S/840 PSU W60L60 OC CFW CL	220 to 240 V	28 W
911401877085	RC065B G5 34S/840 PSU W60L60 OC 6PK SC	220 to 240 V	28 W
911401877585	RC065B G5 34_36S/830_40 PSU 30x120 OC SC	220 to 240 V	30 W
911401877185	RC066B 34_36S/830_40 PSU W62L62 OC	220 to 240 V	30 W
911401871288	RC065B G5 34S/840 PSU W60L60 OC CFW ELR	220-240 V	28 W
911401871388	RC065B G5 34S/840 PSU W60L60 NOC CFW ELR	220-240 V	28 W

Controls and Dimming

Order Code	Full Product Name	Dimmable	Maximum dim level
911401844387	RC065B G5 34_36S/830_40 PSD 60x60 NOC SC	Yes	1%
911401877485	RC065B G5 34_36S/830_40 PSD W60L60 OC SC	Yes	1%
911401876985	RC065B G5 60S/840 PSU 60x120 NOC TPb CFW	No	Not applicable
911401876685	RC066B 34S/840 PSU W62L62 OC	No	Not applicable
911401876785	RC066B 34S/840 PSD W62L62 OC	Yes	1%
911401877285	RC065B G5 34_36S/830_40 PSU W60L60 OC SC	No	Not applicable
911401877385	RC065B G5 34_36S/830_40 PSU 60x60 NOC SC	No	Not applicable
911401873685	RC065B G5 34S/840 PSU W60L60 OC CFW 2	No	Not applicable
911401873885	RC065B G5 34S/840 PSU W60L60 NOC CFW 2	No	Not applicable
911401874085	RC065B G5 34S/840 PSU W60L60 NOC CFW 2CL	No	Not applicable
911401874185	RC065B G5 34S/840 PSU W60L60 OC CFW 2 CL	No	Not applicable
911401875185	RC065B G5 34S/840 PSU W60L60 OC CFW	No	Not applicable
911401875285	RC065B G5 34S/840 PSU W60L60 OC SC	No	Not applicable
911401875385	RC065B G5 34S/865 PSU W60L60 OC CFW	No	Not applicable
911401875485	RC065B G5 34S/840 PSU W60L60 NOC CFW	No	Not applicable
911401875585	RC065B G5 34S/840 PSU W60L60 NOC SC	No	Not applicable
911401875685	RC065B G5 34S/865 PSU W60L60 NOC CFW	No	Not applicable
911401875785	RC065B G5 34S/840 PSD W60L60 OC CFW	Yes	1%
911401875885	RC065B G5 34S/840 PSD W60L60 OC SC	Yes	1%
911401875985	RC065B G5 41S/840 PSU W60L60 NOC CFW	No	Not applicable
911401876085	RC065B G5 41S/840 PSU W60L60 OC CFW	No	Not applicable
911401876185	RC065B G5 41S/840 PSU W60L60 NOC CFW CL	No	Not applicable
911401876285	RC065B G5 41S/840 PSU W60L60 OC CFW CL	No	Not applicable
911401876385	RC065B G5 34S/840 PSU W60L60 NOC CFW CL	No	Not applicable
911401876485	RC065B G5 34S/840 PSU W60L60 OC CFW CL	No	Not applicable
911401877085	RC065B G5 34S/840 PSU W60L60 OC 6PK SC	No	Not applicable
911401877585	RC065B G5 34_36S/830_40 PSU 30x120 OC SC	No	Not applicable
911401877185	RC066B 34_36S/830_40 PSU W62L62 OC	No	Not applicable
911401871288	RC065B G5 34S/840 PSU W60L60 OC CFW ELR	No	-
911401871388	RC065B G5 34S/840 PSU W60L60 NOC CFW ELR	No	-

Mechanical and Housing

Order Code	Full Product Name	Mech. impact protection code
911401844387	RC065B G5 34_36S/830_40 PSD 60x60 NOC SC	IK02
911401877485	RC065B G5 34_36S/830_40 PSD W60L60 OC SC	IK02
911401876985	RC065B G5 60S/840 PSU 60x120 NOC TPb CFW	IK02
911401876685	RC066B 34S/840 PSU W62L62 OC	IK02
911401876785	RC066B 34S/840 PSD W62L62 OC	IK02
911401877285	RC065B G5 34_36S/830_40 PSU W60L60 OC SC	IK02
911401877385	RC065B G5 34_36S/830_40 PSU 60x60 NOC SC	IK02
911401873685	RC065B G5 34S/840 PSU W60L60 OC CFW 2	IK02
911401873885	RC065B G5 34S/840 PSU W60L60 NOC CFW 2	IK02
911401874085	RC065B G5 34S/840 PSU W60L60 NOC CFW 2CL	IK02
911401874185	RC065B G5 34S/840 PSU W60L60 OC CFW 2 CL	IK02
911401875185	RC065B G5 34S/840 PSU W60L60 OC CFW	IK02
911401875285	RC065B G5 34S/840 PSU W60L60 OC SC	IK02
911401875385	RC065B G5 34S/865 PSU W60L60 OC CFW	IK02
911401875485	RC065B G5 34S/840 PSU W60L60 NOC CFW	IK02
911401875585	RC065B G5 34S/840 PSU W60L60 NOC SC	IK02
911401875685	RC065B G5 34S/865 PSU W60L60 NOC CFW	IK02
911401875785	RC065B G5 34S/840 PSD W60L60 OC CFW	IK02
911401875885	RC065B G5 34S/840 PSD W60L60 OC SC	IK02
911401875985	RC065B G5 41S/840 PSU W60L60 NOC CFW	IK02
911401876085	RC065B G5 41S/840 PSU W60L60 OC CFW	IK02
911401876185	RC065B G5 41S/840 PSU W60L60 NOC CFW CL	IK02
911401876285	RC065B G5 41S/840 PSU W60L60 OC CFW CL	IK02
911401876385	RC065B G5 34S/840 PSU W60L60 NOC CFW CL	IK02
911401876485	RC065B G5 34S/840 PSU W60L60 OC CFW CL	IK02
911401877085	RC065B G5 34S/840 PSU W60L60 OC 6PK SC	IK02
911401877585	RC065B G5 34_36S/830_40 PSU 30x120 OC SC	IK02
911401877185	RC066B 34_36S/830_40 PSU W62L62 OC	IK02
911401871288	RC065B G5 34S/840 PSU W60L60 OC CFW ELR	IK03
911401871388	RC065B G5 34S/840 PSU W60L60 NOC CFW ELR	IK03

Initial Performance (IEC Compliant)

Order Code	Full Product Name	Luminous flux tolerance	Initial chromaticity
911401844387	RC065B G5 34_36S/830_40 PSD 60x60 NOC SC	-10%,+15%	(0.43, 0.40) SDCM ≤5(0.38, 0.38) SDCM ≤5
911401877485	RC065B G5 34_36S/830_40 PSD W60L60 OC SC	-10%,+15%	(0.43, 0.40) SDCM ≤5(0.38, 0.38) SDCM ≤5
911401876985	RC065B G5 60S/840 PSU 60x120 NOC TPb CFW	-10%,+15%	(0.38, 0.38) SDCM ≤5
911401876685	RC066B 34S/840 PSU W62L62 OC	-10%,+15%	(0.38, 0.38) SDCM ≤5
911401876785	RC066B 34S/840 PSD W62L62 OC	-10%,+15%	(0.38, 0.38) SDCM ≤5
911401877285	RC065B G5 34_36S/830_40 PSU W60L60 OC SC	-10%,+15%	(0.43, 0.40) SDCM ≤5(0.38, 0.38) SDCM ≤5
911401877385	RC065B G5 34_36S/830_40 PSU 60x60 NOC SC	-10%,+15%	(0.43, 0.40) SDCM ≤5(0.38, 0.38) SDCM ≤5

Order Code	Full Product Name	Luminous flux tolerance	Initial chromaticity
911401873685	RC065B G5 34S/840 PSU W60L60 OC CFW 2	-10%,+15%	(0.38, 0.38) SDCM ≤5
911401873885	RC065B G5 34S/840 PSU W60L60 NOC CFW 2	-10%,+15%	(0.38, 0.38) SDCM ≤5
911401874085	RC065B G5 34S/840 PSU W60L60 NOC CFW 2CL	-10%,+15%	(0.38, 0.38) SDCM ≤5
911401874185	RC065B G5 34S/840 PSU W60L60 OC CFW 2 CL	-10%,+15%	(0.38, 0.38) SDCM ≤5
911401875185	RC065B G5 34S/840 PSU W60L60 OC CFW	-10%,+15%	(0.38, 0.38) SDCM ≤5
911401875285	RC065B G5 34S/840 PSU W60L60 OC SC	-10%,+15%	(0.38, 0.38) SDCM ≤5
911401875385	RC065B G5 34S/865 PSU W60L60 OC CFW	-10%,+15%	(0.31, 0.33) SDCM ≤5
911401875485	RC065B G5 34S/840 PSU W60L60 NOC CFW	-10%,+15%	(0.38, 0.38) SDCM ≤5
911401875585	RC065B G5 34S/840 PSU W60L60 NOC SC	-10%,+15%	(0.38, 0.38) SDCM ≤5
911401875685	RC065B G5 34S/865 PSU W60L60 NOC CFW	-10%,+15%	(0.31, 0.33) SDCM ≤5
911401875785	RC065B G5 34S/840 PSD W60L60 OC CFW	-10%,+15%	(0.38, 0.38) SDCM ≤5
911401875885	RC065B G5 34S/840 PSD W60L60 OC SC	-10%,+15%	(0.38, 0.38) SDCM ≤5
911401875985	RC065B G5 41S/840 PSU W60L60 NOC CFW	-10%,+15%	(0.38, 0.38) SDCM ≤5
911401876085	RC065B G5 41S/840 PSU W60L60 OC CFW	-10%,+15%	(0.38, 0.38) SDCM ≤5
911401876185	RC065B G5 41S/840 PSU W60L60 NOC CFW CL	-10%,+15%	(0.38, 0.38) SDCM ≤5
911401876285	RC065B G5 41S/840 PSU W60L60 OC CFW CL	-10%,+15%	(0.38, 0.38) SDCM ≤5
911401876385	RC065B G5 34S/840 PSU W60L60 NOC CFW CL	-10%,+15%	(0.38, 0.38) SDCM ≤5
911401876485	RC065B G5 34S/840 PSU W60L60 OC CFW CL	-10%,+15%	(0.38, 0.38) SDCM ≤5
911401877085	RC065B G5 34S/840 PSU W60L60 OC 6PK SC	-10%,+15%	(0.38, 0.38) SDCM ≤5
911401877585	RC065B G5 34_36S/830_40 PSU 30x120 OC SC	-10%,+15%	(0.43, 0.40) SDCM ≤5(0.38, 0.38) SDCM ≤5
911401877185	RC066B 34_36S/830_40 PSU W62L62 OC	-10%,+15%	(0.43, 0.40) SDCM ≤5(0.38, 0.38) SDCM ≤5
911401871288	RC065B G5 34S/840 PSU W60L60 OC CFW ELR	-10% / +10%	(0.380,0.380)SDCM<5
911401871388	RC065B G5 34S/840 PSU W60L60 NOC CFW ELR	-10% / +10%	(0.380,0.380)SDCM<5

© 2026 Signify Holding. All rights reserved. The information provided herein is subject to change, without notice. Signify does not give any representation or warranty as to the accuracy or completeness of the information included herein and shall not be liable for any action in reliance thereon. The information presented in this document is not intended as any commercial offer and does not form part of any quotation or contract, unless otherwise agreed by Signify. Philips and the Philips Shield Emblem are registered trademarks of Koninklijke Philips N.V.