PHILIPS

PrimaVision Economy for CPO

DPVCPOEC



Economy drivers – reliable and energy-efficient products for outdoor lighting

Highly reliable electronic drivers for CPO lamps; the drivers are designed for outdoor use and consume less energy than conventional alternatives.

Benefits

- When used together with the CPO lamp, the driver creates the most efficient white-light system available in the industry in its power range
- Up to 15% energy saving thanks to high driver efficiency (92%) and better wattage control at overvoltage (compared with magnetic ballasts)
- Unlike in many magnetic systems, where different elements fail at times, these driversare so reliable that they do not require any attention whatsoever

Applications

- Residential lighting
- City beautification
- Road/highway lighting

Features

- Long lifetime of 60,000 hours, with minimum 90% survival at Tc = 80 °C
- Surge protection of 4 kV/2 kA
- Protection against humidity and vibration
- Improved efficiency compared with magnetic ballasts

Versions



GPPR_IPVECPO_0004-Product photo

Dimensional drawing

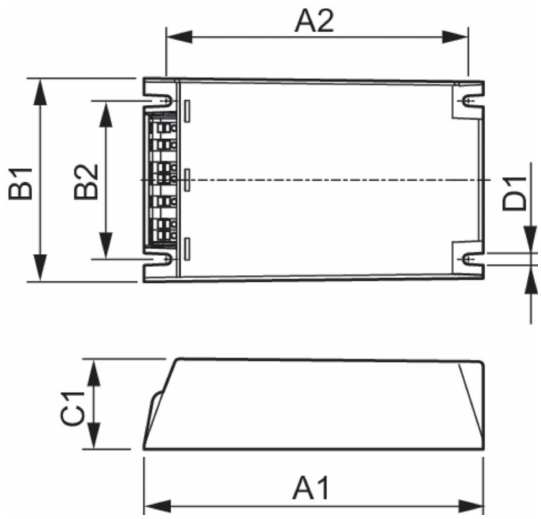

Product
CertaVision CPO140

Operating and Electrical

Input Voltage	208-240-277 V
Line Frequency	50 to 60 Hz
Input Frequency	50 to 60 Hz
Number of Products on MCB (16A Type B) (Nom)	5

Mechanical and Housing

Housing	Q

© 2026 Signify Holding. All rights reserved. The information provided herein is subject to change, without notice. Signify does not give any representation or warranty as to the accuracy or completeness of the information included herein and shall not be liable for any action in reliance thereon. The information presented in this document is not intended as any commercial offer and does not form part of any quotation or contract, unless otherwise agreed by Signify. Philips and the Philips Shield Emblem are registered trademarks of Koninklijke Philips N.V.